CHINO BASIN WATER CONSERVATION DISTRICT

4594 SAN BERNARDINO ST
MONTCLAIR, CA 91763

ADDENDUM NO. 1

CIP NO. 2025-01 – NEW AMPHITHEATER ROOF, RECLADDING, AND DRAINAGE IMPROVEMENTS

June 23, 2025

NOTE: To all bidders submitting proposals for the above captioned project, this Addendum is hereby included in the Contract Documents to the same extent as though it were originally included therein. The following items modify, add to, delete from, or explain the drawings and/or specifications. The contents of this Addendum shall take precedence over the original specifications and plans.

Acknowledge receipt of the Addendum per the Bidder's Checklist on page CD-11 of the Contract Documents and Specifications (8 pages total, including omitted Electrical plans). Failure to do so may result in the bid being deemed non-responsive. It is the responsibility of all bidders to notify all subcontractors from whom they request bids and from whom they accept bids of all changes contained in this addendum. **All other terms and conditions remain unchanged.**

ADDENDUM NO. 1 CONTENTS

I. SPECIFICATIONS

SPECIFICATIONS

1. ADDENDUM NARRATIVE FOR REMOVED ELECTRICAL SCOPE:

- Sheet E-002 – Deleted in its entirety
- Sheet E-101 – Deleted in its entirety
- Sheet E-301 – Deleted in its entirety
- Sheet E-401 – Deleted in its entirety
- Sheet E-501 – Deleted in its entirety

2. DESCOPED ELECTRICAL DRAWINGS:

- 7 PAGES TOTAL

*** * * END OF ADDENDUM NO. 1 * * ***

GENERAL NOTES

1. ALL MATERIALS AND WORKMANSHIP SHALL CONFORM TO THE LATEST CODE OF FEDERAL REGULATIONS (CFR), NATIONAL ELECTRICAL CODE EDITION AND ALL APPLICABLE LOCAL CODES AND REGULATIONS.
2. ALL WORK IS NEW UNLESS NOTED OTHERWISE.
3. ALL PANELS, SWITCHES, ETC. SHALL HAVE SUFFICIENT GUTTER SPACE AND LUGS IN COMPLIANCE TO UL REQUIREMENTS TO ACCOMMODATE CONDUCTORS SHOWN.
4. WHERE WIRE SIZES ARE INDICATED ON PLANS, FOR INDIVIDUAL CIRCUITS, THE WIRE SIZE INDICATED SHALL APPLY TO THE COMPLETE CIRCUIT, UNLESS OTHERWISE NOTED.
5. WHERE EXISTING CIRCUITS OR DEVICES ARE DEMOLISHED, MODIFIED, OR REUSED, ENSURE ALL EXISTING ELECTRICAL UTILIZATION DEVICES TO REMAIN ARE ENERGIZED UPON COMPLETION OF WORK.
6. CONTRACTOR SHALL EXTEND WIRING FROM ALL JUNCTION BOXES, SWITCHES, ETC. AND MAKE FINAL CONNECTION AS REQUIRED TO ALL BUILDING EQUIPMENT REQUIRING ELECTRICAL CONNECTIONS.
7. LOCATION OF LOCAL WALL SWITCHES ARE SUBJECT TO MODIFICATIONS. AT OR NEAR DOORS, INSTALL SWITCHES ON SIDE OPPOSITE TO DOOR HINGE. VERIFY FINAL HINGE LOCATION IN FIELD PRIOR TO ANY WORK.
8. DRAWINGS ARE DIAGRAMMATIC AND INDICATE GENERAL ARRANGEMENT OF SYSTEMS AND WORK INCLUDED. FOLLOW DRAWINGS IN LAYING OUT WORK AND CHECK DRAWINGS OR OTHER TRADES RELATING TO WORK TO VERIFY SPACE IN WHICH WORK WILL BE INSTALLED. MAINTAIN HEADROOM AND MINIMUM CODE REQUIRED WORKING CLEARANCES AT ALL TIMES.
9. CONTRACTOR SHALL COORDINATE THE LOCATION OF ALL WALL OUTLET BOXES FOR SWITCHES, BELL/STROBES, FIRE ALARM PULL STATIONS. RECEPTACLES ETC. WITH CABINETS, FURNITURE, EQUIPMENT ETC., TO AVOID CONFLICT.
10. FURNISH APPROVED EXPANSION FITTINGS WHERE RACEWAY CROSSES BUILDING EXPANSION JOINTS.
11. FURNISH PULL STRING IN EACH RACEWAY RUN OVER 10' IN LENGTH, IN WHICH PERMANENT WIRING IS NOT INSTALLED.
12. NOT MORE THAN THREE LIGHTING OR CONVENIENCE OUTLET CIRCUITS ARE PERMITTED IN ONE CONDUIT, PROVIDE SEPARATE CONDUIT FOR EACH HOMERUN INDICATED ON THE DRAWING, UNLESS INDICATED OTHERWISE.
13. PROVIDE PULL BOXES WHEREVER NECESSARY TO FACILITATE PULLING OF CONDUCTORS. COORDINATE LOCATIONS OF BOXES WITH OTHER TRADES TO AVOID CONFLICT. PULL BOXES SHALL BE ACCESSIBLE. THE SIZE OF PULL BOX SHALL COMPLY WITH N.E.C. REQUIREMENTS.
14. ALL EXTERIOR ELECTRICAL DEVICES AND EQUIPMENT INCLUDING THOSE THAT ARE EXPOSED TO OUTSIDE ENVIRONMENT SHALL BE WEATHERPROOF TYPE, NEMA 3R.
15. LIGHTING, POWER, TELEPHONE AND COMMUNICATIONS OUTLETS SHALL NOT BE PLACED BACK-TO-BACK.
16. WHERE MORE THAN ONE LIGHT SWITCH OCCURS AT SAME LOCATION, SWITCHES SHALL BE MOUNTED IN A MULTIPLE GANG BOX UNDER A SINGLE COVER PLATE. PLATES WITH MORE THAN (3) LIGHT SWITCHES SHALL BE LABELED TO INDICATE THE LIGHT FIXTURES CONTROLLED.
17. ALL ELECTRIC MATERIAL SHALL BE LISTED BY "UL" FOR THE TYPE OF APPLICATION AND "UL" LABEL SHALL APPEAR ON ALL ELECTRICAL EQUIPMENT.
18. ALL DISTRIBUTION AND CONTROL EQUIPMENT (SUCH AS CB's, SWITCHES, CONTACTORS, ETC.), TERMINATIONS SHALL BE FULLY RATED PER UL AS FOLLOWS:
    a. 100A OR LESS : 60°C OR MORE;
    b. MORE THAN 100A : 75°C OR MORE.
19. ANY ERRORS, OMISSIONS, OR DESIGN DISCREPANCIES ON PLANS OR SPECIFICATIONS SHALL BE BROUGHT TO THE ATTENTION OF THE ELECTRICAL ENGINEER FOR CLARIFICATION OR CORRECTION PRIOR TO CONSTRUCTION AND PREPARATION OF SUBMITTAL PACKAGES.
20. CONDUCTORS SHALL HAVE UNDERWRITER'S LABORATORIES, INC.(UL) LISTED, 600 VOLT INSULATION OF TYPE SPECIFIED BELOW OR ELSEWHERE IN THE SPECIFICATIONS. CONDUCTORS SHALL BE COPPER AND LISTED FOR 90 DEGREE APPLICATIONS.
    1. BRANCH CIRCUITS - LIGHTING AND POWER.
        a. #10 AWG AND SMALLER, SOLID WIRE TYPE THW OR THHN/THWN-2, THHW(THHN FOR DRY LOCATION ONLY).
        b. #8 AWG TO #2 AWG, STRANDED TYPE THW OR THHN/THHW.
        c. #1 AWG AND LARGER, STRANDED TYPE XHHW-2.
    2. FEEDERS : TYPE THW OR THHN/THWN-2, OR XHHW-2.
21. PROVIDE GREEN INSULATED GROUNDING CONDUCTOR IN EACH RACEWAY INCLUDING CONDUITS, PLUG STRIPS, WIREMOLD. SIZE OF GROUNDING SHALL BE IN ACCORDANCE WITH NATIONAL ELECTRIC CODE ARTICLE 250.
22. WIRING METHOD SHALL BE EMT ABOVE GROUND AND MOUNTED IN CONCEALED SPACES AND SCHEDULE-40 PVC FOR UNDERGROUND INSTALLATION. USE RIGID WHEN ENCASED IN CONCRETE OR SUSCEPTIBLE TO DAMAGE.
23. ALL SWITCH LOCATIONS ARE REQUIRED TO HAVE A NEUTRAL CONDUCTOR PROVIDED AT THE SWITCH LOCATION PER NEC 404.2(C).
24. UNLESS OTHERWISE INDICATED, SHARING OF NEUTRAL/GROUNDED CONDUCTORS AMONG SINGLE PHASE BRANCH CIRCUITS OF DIFFERENT PHASES INSTALLED IN THE SAME RACEWAY IS NOT PERMITTED. PROVIDE DEDICATED NEUTRAL/GROUNDED CONDUCTOR FOR EACH INDIVIDUAL BRANCH CIRCUIT.
25. BASIS OF ELECTRICAL DESIGN LIMITS VOLTAGE DROP TO 2% FOR FEEDERS AND 3% FOR BRANCH CIRCUITS. ANY CHANGES MADE IN THE FIELD SHALL LIMIT VOLTAGE DROP TO THESE PERCENTAGES.
26. BRANCH CIRCUIT CONDUITS SHALL BE CONCEALED IN WALL OR CEILING SPACES. EXPOSED CONDUITS ARE NOT ALLOWED WHERE CONCEALED METHODS ARE AVAILABLE.
27. CONTRACTOR SHALL PROVIDE CONDUCTORS AND CONDUITS REQUIRED FOR ALL BRANCH CIRCUITS AND FEEDERS. FOR CIRCUIT SIZES NOT SHOWN, REFER TO PANEL SCHEDULES FOR CONDUCTOR AND CONDUIT SIZES.
28. REFER TO LIGHTING CONTROL DETAILS FOR WIRING AND CONDUIT REQUIREMENTS. CONTRACTOR SHALL PROVIDE ALL WIRING AND CONDUITS REQUIRED BY MANUFACTURER TO FIXTURES AND CONTROLS.
29. THE CONTRACTOR SHALL COORDINATE THE WORK WITH OTHER TRADES. ANY COSTS TO INSTALL WORK TO ACCOMPLISH SAID COORDINATION, WHICH DIFFERS FROM THE WORK AS SHOWN ON THE CONTRACT DOCUMENTS, SHALL BE INCURRED BY THE CONTRACTOR. ANY DISCREPANCIES, AMBIGUITIES OR CONFLICTS SHALL BE BROUGHT TO THE ATTENTION OF THE OWNER'S REPRESENTATIVE DURING BID TIME FOR CLARIFICATION. ANY SUCH CONFLICTS NOT CLARIFIED PRIOR TO BID SHALL BE SUBJECT TO THE INTERRUPTION OF THE OWNER'S REPRESENTATIVE AT NO ADDITIONAL COST TO THE OWNER.
30. ALL 125 AND 250-VOLT, 15- AND 20-AMPERE NONLOCKING TYPE RECEPTACLES SHALL BE LISTED TAMPER RESISTANT RECEPTACLES IN AREAS SPECIFIED IN NEC 406.12.
31. ALL 125-VOLT THROUGH 250-VOLT RECEPTACLES SUPPLIED BY SINGLE-PHASE BRANCH CIRCUITS RATED 150 VOLTS OR LESS TO GROUND, 50 AMPERES OR LESS, AND ALL RECEPTACLES SUPPLIED BY THREE-PHASE BRANCH CIRCUITS RATED 150 VOLTS OR LESS TO GROUND, 100 AMPERES OR LESS, INSTALLED IN THE LOCATIONS SPECIFIED BELOW SHALL HAVE GROUND-FAULT CIRCUIT-INTERRUPTER PROTECTION FOR PERSONNEL AND ANY OTHER AREAS SPECIFIED IN NEC 210.8
    a. ROOFTOPS
    b. OUTDOORS

ABBREVIATIONS

A	AMPERE
AF	AMPERE FRAME RATING
AFC	AVAILABLE FAULT CURRENT
AFF	ABOVE FINISHED FLOOR
AFG	ABOVE FINISHED GRADE
AFU	AMPHERE FUSE RATING (FUSE)
AIC	AMPHERE INTERRUPTING CAPACITY
AS	AMPERE SWITCH RATING (FUSE)
AT	AMPERE TRIP RATING (CIRCUIT BREAKER)
AWG	AMERICAN WIRE GAUGE
BCG	BARE COPPER GROUND
BKBD	BACKBOARD
BLDG	BUILDING
BKR	BREAKER
C	CONDUIT
CB	CIRCUIT BREAKER
CKT	CIRCUIT
CFSD	COMBINATION FIRE SMOKE DAMPER
CO	CONDUIT ONLY
CONC	CONCRETE
CT	CURRENT TRANSFORMER
CU	COPPER
℄	CENTERLINE
DISC	DISCONNECT
DSBN	DISTRIBUTION SECTION
DN	DOWN
DWG	DRAWING
EA	EACH
EC	ELECTRICAL CONTRACTOR
EM	EMERGENCY
EMT	ELECTRICAL METALLIC TUBING
EPO	EMERGENCY POWER OFF
EXIST, (E)	EXISTING
EXO	EXTERNAL OPERABLE DISCONNECT
F	FUSE
FA	FIRE ALARM
FACP	FIRE ALARM CONTROL PANEL
FF	FINISHED FLOOR
FG	FINISHED GRADE
FLA	FULL LOAD CURRENT
GEC	GROUNDING ELECTRODE CONDUCTOR
GEN	GENERATOR
GFCI	GROUND FAULT CIRCUIT INTERRUPTER
GFP	GROUND FAULT PROTECTION
GND	GROUND
HD	HEAVY DUTY
HOA	HAND-OFF-AUTOMATIC
HP	HORSE POWER
HV	HIGH VOLTAGE
IDF	INTERMEDIATE DISTRIBUTION FRAME
IG	ISOLATED/INSULATED GROUND
ISC	SHORT CIRCUIT CURRENT AVAILABLE IN RMS SYMMETRICAL AMPERES
J-BOX	JUNCTION BOX
KCMIL	THOUSAND CIRCULAR MILS
KW	KILOWATT
KV	KILO VOLT
KVA	KILO VOLT-AMPERE
LDC	LOCAL DISTRIBUTION CABINET
LDF	LOCAL DISTRIBUTION FRAME
LCL	LONG CONTINUOUS LOAD
LFMC	LIQUID TIGHT FLEXIBLE METAL CONDUIT
LSIG	LONG, SHORT, INSTANTANEOUS, GROUND
LTG	LIGHTING
LV	LOW VOLTAGE
MFR	MANUFACTURER
MAX	MAXIMUM
MCC	MOTOR CONTROL CENTER
MIN	MINIMUM
MH	MANHOLE / METAL HALIDE
MLO	MAIN LUGS ONLY
M/M	METER AND MAIN SECTION
MV	MEDIUM VOLTAGE
NC	NORMALLY CLOSED
NEC	NATIONAL ELECTRICAL CODE
NEMA	NATIONAL ELECTRICAL MANUFACTURER'S ASSOCIATION
NEW (N)	NEW, TO BE FURNISHED AND INSTALLED BY CONTRACTOR
NF	NON-FUSED
NIC	NOT IN CONTRACT
N/L	NIGHT LIGHT
NO	NUMBER, NORMALLY OPEN
NTS	NOT TO SCALE
OC	ON CENTER
OD	OUTSIDE DIAMETER
PB	PULL BOX
PF	POWER FACTOR
PNL	PANEL
POC	POINT OF CONNECTION
PP	POWER POLE
PWR	POWER
PVC	POLYVINYL CHLORIDE
QUAD	QUADRUPLEX
QTY	QUANTITY
RGS	RIGID GALVANIZED STEEL
RMC	RIGID METALLIC CONDUIT
RM	ROOM
RNC	RIGID NONMETALLIC CONDUIT
SHT	SHEET
SN	SOLID NEUTRAL
SPEC	SPECIFICATIONS
SW	SWITCH
SWBD	SWITCHBOARD
TC	TIME CLOCK
TEL	TELEPHONE
TERM	TERMINAL
TP	TEMPORARY POLE
TYP	TYPICAL
UGPS	UNDERGROUND PULL SECTION
UL	UNDERWRITERS LABORATORY
UPS	UNINTERRUPTIBLE POWER SUPPLY
UON	UNLESS OTHERWISE NOTED
V	VOLT, VOLTAGE
VA	VOLT-AMPERE
VD	VOLTAGE DROP
VFC	VARIABLE FREQUENCY CONTROLLER
VFD	VARIABLE FREQUENCY DRIVE
W	WATT
WH	WATT-HOUR
WP	WEATHERPROOF
WW	WIREWAY
XP	EXPLOSION PROOF
Z	IMPEDANCE
4W	FOUR-WIRE
3W	THREE-WIRE
SS	JUNCTION BOX (4 11/16" SQUARED X2 1/8" DEEP)
Ø	DIAMETER, PHASE
#	NUMBER
°C	DEGREE CELSIUS
(E)	EXISTING DEVICE TO REMAIN
(R)	REMOVE EXISTING DEVICE AND ASSOCIATED CONDUIT AND WIRE
(RL)	REMOVE EXISTING DEVICE AND RELOCATE AS SHOWN ON PLAN
(NL)	NEW LOCATION OF RELOCATED DEVICE

GENERAL DEMOLITION NOTES

1. THE CONTRACTOR SHALL VISIT THE PROJECT SITE AND MAKE THEMSELVES COMPLETELY FAMILIAR WITH THE EXISTING INSTALLED CONDITIONS. A FIELD SURVEY VERIFICATION IS MANDATORY IN ORDER TO SUBMIT AN ELECTRICAL BID, FAILURE TO DO SO SHALL NOT RELIEVE THIS CONTRACTOR FROM PERFORMING THE WORK OF THIS CONTRACT.
2. ALL EQUIPMENT OR WORK REQUIRED TO CARRY OUT THE DEMOLITION SCOPE OF WORK IS CONSIDERED TO BE PART OF THE CONTRACTOR SCOPE OF WORK. NO EXTRAS WILL BE CONSIDERED TO PERFORM THE REQUIRED WORK.
3. THE CONTRACTOR SHALL OBTAIN WRITTEN PERMISSION FROM THE FACILITY DIRECTOR PRIOR TO THE SCHEDULING OF ANY POWER OUTAGE. SUCH PERMISSION MUST BE OBTAINED IN WRITING AND BE GRANTED AT LEAST 7 DAYS PRIOR TO ANY SCHEDULE SHUT DOWN. THE SHUT DOWN SHALL NOT EXCEED A DURATION OF 4 HOURS.
4. THE CONTRACTOR SHALL NOT STORE ON SITE ANY ITEMS THAT WERE DEMOLISHED FOR ANY EXTENDED PERIOD OF TIME, WITHOUT THE WRITTEN PERMISSION OF THE CAMPUS FACILITY DIRECTOR.
5. ALL ELECTRICAL ITEMS DESIGNATED AS EXISTING TO REMAIN SHALL AS PART OF THIS SCOPE OF WORK BE CLEANED AND TESTED, TO INSURE PROPER OPERATION. ANY ITEMS THAT FAIL TO PASS THE TEST SHALL BE BROUGHT TO THE ATTENTION OF THE FIELD INSPECTOR AND THE ENGINEER OF RECORD FOR RESOLUTION.
6. THE CONTRACTOR SHALL REMOVE ALL EXISTING SWITCHBOARDS, DISTRIBUTION BOARDS, PANEL BOARDS, LIGHTING FIXTURES, CONDUITS, WIRES AND OTHER ELECTRICAL APPARATUS DESIGNATED AS EXISTING TO BE REMOVED. DEMOLITION ITEMS, IF NOT REQUIRED TO BE SALVAGED BY OWNER, BECOME THE PROPERTY OF THE CONTRACTOR AND SHALL BE DISPOSED OF IN AN APPROPRIATE MANNER.
7. THE CONTRACTOR SHALL REMOVE ALL CONDUITS SERVING DEVICES WHICH ARE DESIGNATED AS EXISTING TO BE REMOVED, BACK TO THE SOURCE.
8. DEMOLITION AND/OR REMOVAL OF ELECTRICAL EQUIPMENT IN AREAS TO BE REMODELED SHALL BE THE RESPONSIBILITY OF THE CONTRACTOR.
9. WHERE OUTLETS ARE REMOVED IN EXISTING WALL, REMOVE DEVICES, OUTLETS AND WIRING BACK TO PANELBOARD OR BACK TO NEAREST OUTLET WITH OTHER EXISTING LOAD TO REMAIN.
10. WHERE EXISTING CONDUIT AND CONDUCTORS ARE TO BE REMOVED AND CONDUIT IS INSTALLED IN GROUND OR EMBEDDED IN CONCRETE, REMOVE WIRE AND CUT CONDUIT TO BELOW FLOOR, PLUG CONDUIT, PATCH FLOOR AND ABANDON CONDUIT.
11. WHERE ELECTRICAL DEVICES ARE TO BE REMOVED, REMOVE ALL CONDUIT AND CONDUCTORS BACK TO SOURCE, TERMINAL CABINETS AND RACKS, PROVIDE BLANK COVER PLATE FOR ABANDONED JUNCTION BOXES.
12. REMOVE ALL CONTROL PANELS, EQUIPMENT RACKS, PULL-BOXES, TERMINAL CABINETS, ETC. FOR SYSTEMS TO BE DEMOLISHED EXCEPT WHERE ANY OF THE EXISTING DEVICES, SYSTEMS, CONSOLES, ETC. ARE TO BE REUSED FOR UPGRADE.
13. PROVIDE BLANK COVER PLATE FOR ALL EMPTY OUTLET BOXES WHERE DEVICES AND/OR CONDUCTORS HAVE BEEN REMOVED AS PART OF THIS CONTRACT.
14. AFTER REMOVAL OF WIREMOLD AND ASSOCIATED FITTINGS, PATCH, REPAIR AND PAINT AFFECTED SURFACES TO MATCH EXISTING.
15. EXISTING CONDUIT CAN BE REUSED PROVIDING IT IS CODE COMPLIANT, IS CHECKED FOR CONTINUITY OF GROUND, CLEAN AND MANDREL, AND DOES NOT INTERFERE WITH NEW CONSTRUCTION.
16. REMOVALS AND REPAIRS TO EXISTING ELECTRICAL WORK REQUIRED TO AVOID CONFLICTS WITH NEW CONSTRUCTION TO MEET MINIMUM CODE REQUIREMENTS.

NOTE TO CONTRACTOR

DO NOT SCALE DRAWINGS

CONTRACTOR SHALL VERIFY PLANS AND EXISTING DIMENSIONS AND CONDITIONS ON THE JOB SITE AND SHALL IMMEDIATELY NOTIFY THE ARCHITECT IN WRITING OF ANY DISCREPANCIES BEFORE PROCEEDING WITH THE WORK OR BE RESPONSIBLE FOR THE SAME.

LIGHTING LEGEND AND SYMBOLS

SYMBOL	DESCRIPTION
FN / ab / N/L	2'X4' RECESSED LUMINAIRE. FN INDICATES LUMINAIRE TYPE - REFER TO LUMINAIRE SCHEDULE. TYPICAL. SUBSCRIPT 2ab REFERS TO CIRCUIT AND SWITCH LEG 'a' AND 'b'. SUBSCRIPT N/L REFERS TO UNSWITCHED LEG.
FNE	2'X4' RECESSED LUMINAIRE WITH 90MIN. EMERGENCY BATTERY BACKUP
	SURFACE MOUNTED DOUBLE FACE EXIT SIGN (UNIVERSAL ARROWS INDICATED AS NEEDED)
	SURFACE MOUNTED SINGLE FACE EXIT SIGN (UNIVERSAL ARROWS INDICATED AS NEEDED)
S3ab	SWITCH, SINGLE POLE 20A. MOUNTED 48" A.F.F. TO TOP OF DEVICE. SUBSCRIPTS INDICATE THE FOLLOWING: M - MOTOR RATED K - KEY OPERATED 3 - THREE WAY D - DIMMER SWITCH 4 - FOUR WAY T - TIMED SWITCH a, b; c, ETC. - DESIGNATES SWITCH-LEGS CONTROLLED AND QUANTITY OF SWITCHES AT EACH LOCATION.
	OCCUPANCY SENSOR, DUAL-TECHNOLOGY, SURFACE CEILING MOUNTED. WATT STOPPER MODEL #DT-300 OR LEVITON MODEL #OSC20-MOW. PROVIDE WITH POWER PACK(S) AS REQUIRED.
	DUAL TECHNOLOGY OCCUPANCY SENSOR, SURFACE WALL MOUNTED 180° U.O.N. LEVITON MODEL #OSSMT-GD (FOR SINGLE POLE SWITCHING) & LEVITON MODEL #OSSMD-GD FOR (DUAL SWITCHING)
Sab	LOW-VOLTAGE DIMMER SWITCH. MOUNTED 48" A.F.F. TO TOP OF DEVICE. a, b, c, ETC. - DESIGNATES SWITCH-LEGS CONTROLLED AND QUANTITY OF SWITCHES AT EACH LOCATION.
Uab	LOW-VOLTAGE OCCUPANCY SENSOR, DUAL-TECHNOLOGY, SURFACE CEILING MOUNTED INTERCONNECTED TO NETWORK LIGHTING CONTROLS.
	CEILING MOUNTED DIGITAL ROOM CONTROLLER INTERCONNECTED TO NETWORK LIGHTING CONTROLS.

SIGNAL LEGEND AND SYMBOLS

SYMBOL	DESCRIPTION
	DATA OUTLET BOX 4S, MOUNTED +15" A.F.F. TO BOTTOM OF DEVICE U.O.N. STUB 3/4" C.O. 6" ABOVE CEILING SPACE, PROVIDE BUSHING AND PULL WIRE. IF INSTALLED IN AREA WITH EXPOSED STRUCTURE ABOVE OR HARD LID CEILING, PROVIDE 3/4" C.O. BACK TO LOCATION OF NEAREST IDF/MDF.
W	TELEPHONE OUTLET BOX 4S, MOUNTED +15" A.F.F. TO BOTTOM OF DEVICE U.O.N. STUB 3/4" C.O. 6" ABOVE CEILING SPACE, PROVIDE BUSHING AND PULL WIRE. IF INSTALLED IN AREA WITH EXPOSED STRUCTURE ABOVE OR HARD LID CEILING, PROVIDE 3/4" C.O. BACK TO LOCATION OF NEAREST COMMUNICATIONS CABINET OR TELEPHONE BACKBOARD. "W" INDICATES +42" A.F.F. UNLESS OTHERWISE NOTED.
	COMBINATION TELEPHONE & DATA OUTLET BOX 4S, MOUNTED +15" A.F.F. TO BOTTOM OF DEVICE U.O.N. STUB 3/4" C.O. 6" ABOVE CEILING SPACE, PROVIDE BUSHING AND PULL WIRE. IF INSTALLED IN AREA WITH EXPOSED STRUCTURE ABOVE OR HARD LID CEILING, PROVIDE 3/4" C.O. BACK TO LOCATION OF NEAREST IDF/MDF, COMMUNICATIONS CABINET, OR TELEPHONE BACKBOARD.
W	COMBINATION TELEPHONE & DATA OUTLET BOX 4S, MOUNTED HEIGHT HORIZONTALLY ABOVE COUNTER TOP PER ARCHITECTURAL PLANS OR APPROVAL STUB 3/4" C.O. 6" ABOVE CEILING SPACE, PROVIDE BUSHING AND PULL WIRE. IF INSTALLED IN AREA WITH EXPOSED STRUCTURE ABOVE OR HARD LID CEILING, PROVIDE 3/4" C.O. BACK TO LOCATION OF NEAREST IDF/MDF, COMMUNICATIONS CABINET, OR TELEPHONE BACKBOARD.

APPLICABLE CODES

1. 2022 BUILDING STANDARDS ADMINISTRATIVE CODE, PART 1, TITLE 24 C.C.R.
2. 2022 CALIFORNIA BUILDING CODE (CBC),PART 2, TITLE 24 C.C.R. (IBC WITH AMENDMENTS)
3. 2022 CALIFORNIA ELECTRICAL CODE (CEC), PART 3, TITLE 24 C.C.R. (NEC WITH AMENDMENTS)
4. 2022 CALIFORNIA MECHANICAL CODE (CMC), PART 4, TITLE 24 C.C.R. (UMC WITH AMENDMENTS)
5. 2022 CALIFORNIA PLUMBING CODE (CPC), PART 5, TITLE 24 C.C.R. (UPC WITH AMENDMENTS)
6. 2022 CALIFORNIA FIRE CODE, PART 9, TITLE 24 C.C.R. (IFC WITH AMENDMENTS)
7. 2022 CALIFORNIA REFERENCED STANDARDS, PART 12, TITLE 24 C.C.R.
8. TITLE 19 C.C.R., PUBLIC SAFETY, STATE FIRE MARSHAL REGULATIONS.
9. 2022 CALIFORNIA ENERGY CODE (PART 6, TITLE 24 C.C.R.)
10. 2022 CALIFORNIA GREEN BUILDING STANDARDS CODE (CGBSG), PART 11, TITLE 24 C.C.R.

ELECTRICAL SHEET INDEX

SHEET NUMBER	SHEET NAME
E-001	ELECTRICAL LEGENDS & NOTES
~~E-002~~	~~SINGLE LINE DIAGRAM & PANEL SCHEDULES~~
~~E-101~~	~~ELECTRICAL SITE PLAN~~
E-201	ELECTRICAL DEMOLITION PLAN - BUILDING A
~~E-301~~	~~POWER & SIGNAL PLAN - BUILDING A~~
~~E-401~~	~~ELECTRICAL DETAILS~~
~~E-601~~	~~ELECTRICAL SPECIFICATIONS~~
~~Grand total: 7~~	

POWER LEGEND AND SYMBOLS

SYMBOL	DESCRIPTION
A-1	SUBSCRIPT "A-1" REFERS TO PANEL DESIGNATION WITH CIRCUIT NUMBER. TYPICAL OF ALL RECEPTACLE OUTLETS.
	DUPLEX RECEPTACLE OUTLET, CONVENIENCE. (20 AMPS, 125 VOLTS) MOUNTED +15" A.F.F. TO BOTTOM OF DEVICE U.O.N.
	DOUBLE DUPLEX RECEPTACLE OUTLET, CONVENIENCE. (20 AMPS, 125 VOLTS) MOUNTED +15" A.F.F. TO BOTTOM OF DEVICE U.O.N.
	DUPLEX RECEPTACLE OUTLET, CONVENIENCE. (20 AMPS, 125 VOLTS, GFCI TYPE) MOUNTED + 15" A.F.F. TO BOTTOM OF DEVICE U.O.N.
	DUPLEX RECEPTACLE OUTLET, CONVENIENCE. (20 AMPS, 125 VOLTS) WITH MOUNTING HEIGHT HORIZONTALLY ABOVE COUNTER TOP PER ARCHITECTURAL PLANS OR APPROVAL.
	DUPLEX RECEPTACLE OUTLET, CONVENIENCE. (20 AMPS, 125 VOLTS, GFCI TYPE) WITH MOUNTING HEIGHT HORIZONTALLY ABOVE COUNTER TOP PER ARCHITECTURAL PLANS OR APPROVAL.
WP	WEATHERPROOF DUPLEX RECEPTACLE OUTLET, CONVENIENCE. (20 AMPS, 125 VOLTS) MOUNTED +15" A.F.F. TO BOTTOM OF DEVICE U.O.N.
	SURFACE MOUNTED DUPLEX RECEPTACLE OUTLET, CONVENIENCE. (20 AMPS, 125 VOLTS) MOUNTED +15" A.F.F. TO BOTTOM OF DEVICE U.O.N.
J	ABOVE CEILING, CONCEALED, JUNCTION BOX, WITH COVER, PER NATIONAL ELECTRICAL CODE (NEC) TABLE 370-b(a). 4" SQUARE DEEP, WITH PLASTER RING
J	RECESSED WALL MOUNTED, JUNCTION BOX, WITH COVER, PER NATIONAL ELECTRICAL CODE (NEC) TABLE 370-b(a). 4" SQUARE DEEP, WITH PLASTER RING
	JUNCTION BOX, FLUSH IN FLOOR, WATERTIGHT JUNCTION BOX (20 AMP, 120 VOLT, 2-POLE, 3-WIRE) U.O.N.
J	FLOOR BOX NOTE WHERE INDICATED IN AN EXISTING SLAB, PROVIDE SAWCUTTING OF SLAB AS REQUIRED AND EXTEND CONDUIT AND WIRING TO JUNCTION BOX IN NEAREST ACCESSIBLE WALL. DO NOT SAWCUT THROUGH POST TENSION SLABS.
L5-30 R	SPECIALTY OUTLET. VERIFY NEMA CONFIGURATION AS NOTED ON PLANS.
OR	BRANCH PANELBOARD, WALL MOUNTED, SEE PLANS AND SCHEDULE. (RECESSED MOUNTED)
	BRANCH PANELBOARD, WALL MOUNTED, SEE PLANS AND SCHEDULE. (SURFACE MOUNTED)
	MAIN SWITCHBOARD, POWER OR LIGHT, FLOOR STANDING ENCLOSURE, (SEE SINGLE LINE DIAGRAM AND LOAD SUMMARY)
F 100AS	HEAVY DUTY SAFETY SWITCH H.P. AND 600 VOLTS RATED. "F" INDICATES FUSE TYPE. FUSES PER APPROVED EQUIPMENT MANUFACTURERS SHOP DRAWINGS. SUBSCRIPT INDICATES SWITCH PER AMPERE RATING. # OF POLES TO MATCH SUPPLY CIRCUIT.
+96" OR +7'-6" AFF	MOUNTING HEIGHT FROM FINISHED FLOOR TO CENTERLINE OF OUTLET OR EQUIPMENT . FOR LIGHT FIXTURES, IT IS TO BOTTOM OF FIXTURE.
	CONDUIT STUBBED AND CAPPED, SIZE AND QUANTITIES PER PLANS.
	CONDUIT CONCEALED IN OR UNDER FLOOR, 3/4" UON, COORDINATE WITH G.C.; OR, BURIAL CONDUIT UNDERGROUND. REFER TO PLANS, DETAILS AND SPECIFICATIONS.
DETAIL No. / SHEET No.	DETAIL REFERENCE
EQUIPMENT / ID No.	EQUIPMENT REFERENCE
A-1,3	HOMERUN TO CIRCUITS #1 AND #3 IN PANEL "A" (CROSSMARKS INDICATE NUMBER OF WIRES AND DOTTED CROSSMARK INDICATES GROUND WIRE.)
	GROUND WELL
	EXISTING (DASH INDICATES) ELECTRICAL EQUIPMENT
	TELEPHONE BACKBOARD 2'X4'X3/4" PLYWOOD. PROVIDE 2" CONDUIT TO TELEPHONE POC.
	MOLDED CASE CIRCUIT BREAKER
	SWITCH AND FUSE ASSEMBLY
	UTILITY COMPANY PULL SECTION LUGS
	GROUNDING CONNECTION TO MAIN BUILDING GROUND SYSTEM U.O.N.
N G	GROUNDING CONNECTION AT SWITCHGEAR/DISTRIBUTION BOARD WITH NEUTRAL BONDING.
M	IN-LINE UTILITY COMPANY METER
M	UTILITY METER WITH CURRENT TRANSFORMERS (CT'S) METER
SS	SOLID STATE DEVICE CONNECTED TO THE POWER DISTRIBUTION SYSTEM
GFP	GROUND FAULT PROTECTION DEVICE CONNECTED TO THE POWER DISTRIBUTION SYSTEM
T OR	TRANSFORMER WITH SECONDARY GROUND. REFER TO SINGLE LINE DIAGRAM FOR KVA RATING AND GROUNDING REQUIREMENTS.
200-D	CONDUIT WIRING DESCRIPTION PER FEEDER SCHEDULE ON OTHER PLAN
PB	CONCRETE ELECTRICAL PULLBOX WITH LID APPROPRIATE FOR INSTALLATION LOCATION. LID SHALL BE LABELED ACCORDING TO USE.

AGENCY APPROVAL DSA#

196

560 HIGUERA STREET, SUITE C
SAN LUIS OBISPO, CA 93401
TEL (805) 476-0399

CONSULTANTS

CIVIL ENGINEER
JMDiaz, Inc.
18645 East Gale Avenue, Suite 212
City of Industry, CA 91748
TEL (626) 820-1137

STRUCTURAL ENGINEER
T&B Engineering, Inc.
4344 Latham St., Suite 200
Riverside, CA 92501
TEL (951) 224-8665

ELECTRICAL ENGINEER
Design West Engineering
412 E Vanderbilt Way
San Bernardino, CA 92408
TEL (909) 890-3700

ARCHITECT STAMP

LICENSED ARCHITECT ALAN GLEN KROEKER C-22474 REN. 10-31-23 STATE OF CALIFORNIA

CONSULTANT STAMP

REGISTERED PROFESSIONAL ENGINEER BRADEN KERR No. 22839 EXPIRES 01/29/2025 ELECTRICAL STATE OF CALIFORNIA

REVISIONS

NO.	DATE	DESCRIPTION

THE ARCHITECT DOES NOT REPRESENT THAT THESE PLANS OR THE SPECIFICATIONS ARE SUITABLE FOR ANY SITE OTHER THAN THE ONE FOR WHICH THEY WERE SPECIFICALLY PREPARED. THE ARCHITECT DISCLAIMS RESPONSIBILITY FOR THESE PLANS AND SPECIFICATIONS IF THEY ARE USED IN WHOLE OR IN PART AT ANY OTHER SITE. WRITTEN DIMENSIONS ON THESE DRAWINGS SHALL HAVE PRECEDENCE OVER SCALED DIMENSIONS.

PROJECT OWNER & TITLE

CHINO BASIN WATER CONSERVATION DISTRICT
4594 San Bernardino St
Montclair, CA 91763

CHINO BASIN WCD AMPHITHEATER ROOF
4594 San Bernardino St,
Montclair, CA 91763

SHEET TITLE

ELECTRICAL LEGENDS & NOTES

DRAWN BY: RL/MH/SA JOB NUMBER: 023495.01

SHEET NO.

E-001

DATE: DECEMBER 04, 2024

100% CONSTRUCTION DOCUMENTS

DATE PLOTTED: 1/29/2025 2:10:59 PM FILE LOCATION: Autodesk Docs://24-209 CBWCD Waterwise/24-209 CBWCD Waterwise CC Amphitheater_MEP_Central_R24.rvt

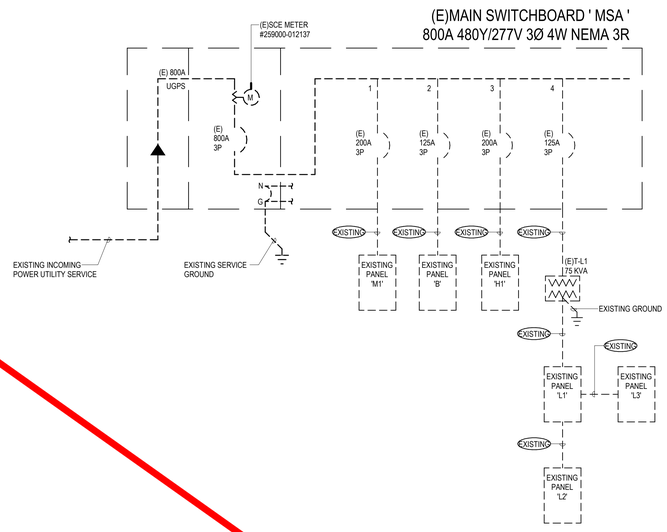

DRAWING REMOVED FROM SCOPE

MOUNTING: SURFACE
FED FROM: PANEL 'L1'
NEMA: 1
AIC RATING: EXISTING

PANEL
L3
(EXISTING)
LOCATION: ELECTRICAL ROOM

VOLTAGE: 208Y/120V 3PH 4W
BUS: 125 A
MAIN: M.L.O.
FEEDER: EXISTING

NOTE	DESCRIPTION	TYPE	POLES	AMP	AWG /PH	DIST	V.D. %	C.		A		B		C		C.	V.D. %	DIST	AWG /PH	AMP	POLES	TYPE	DESCRIPTION	NOTE
1	(E) RECEP ROLL-UP DOOR	--	1	20 A	--	--	0	--	1	1176	200				2	--	0	--	--	20 A	1	--	(E) TOILET LTG/FANS	1
1	(E) A/V CABINET REC	--	1	20 A	--	--	0	--	3			500	100		4	--	0	--	--	20 A	1	--	(E) EF-3	
1	(E) TOWER LOUVER	--	1	20 A	--	--	0	--	5					500	100	6	--	0	--	--	20 A	1	--	(E) EF-6	1
1	(E) TOWER LTG.	--	1	20 A	--	--	0	--	7	200	912					8	--	0	--	--	20 A	1	--	(E) CU-4	1
1	(E) LOBBY FLOOR REC	--	1	20 A	--	--	0	--	9			1080	500			10	--	0	--	--	20 A	1	--	(E) PROJECTOR	1
1	(E) GD-1	--	1	20 A	--	--	0	--	11					750	360	12	--	0	--	--	20 A	1	--	(E) WINDOW SHADES	1
1	(E) LOBBY FLOOR RECEPT.	--	1	20 A	--	--	0	--	13	360	0					14	--	0	--	--	20 A	1	--	SPARE	
	SPARE	--	1	20 A	--	--	0	--	15			0	0			16	--	0	--	--	20 A	1	--	SPARE	
	SPARE	--	1	20 A	--	--	0	--	17					0	0	18	--	0	--	--	20 A	1	--	SPARE	
	SPARE	--	1	20 A	--	--	0	--	19	0	0					20	--	0	--	--	20 A	1	--	SPARE	
	SPARE	--	1	20 A	--	--	0	--	21			0	0			22	--	0	--	--	20 A	1	--	SPARE	
	SPACE	--	1	--	--	--	0	--	23					--	--	24	--	0	--	--	--	1	--	SPACE	
	TWIST-OUT AREA	--	1	--	--	--	0	--	25	--	--					26	--	0	--	--	--	1	--	TWIST-OUT AREA	
	TWIST-OUT AREA	--	1	--	--	--	0	--	27			--	--			28	--	0	--	--	--	1	--	TWIST-OUT AREA	
	TWIST-OUT AREA	--	1	--	--	--	0	--	29					--	--	30	--	0	--	--	--	1	--	TWIST-OUT AREA	
									SUBTOTALS	2848 VA		2180 VA		1710 VA										

DEMAND FACTORS: LOAD TYPE	CONNECTED VA	DEMAND FACTOR	DEMAND VA	DEMAND AMPS
(L) LIGHTING		1.25		
(R) RECEPTACLES		NEC 220.44		
(M) MOTOR		1.25		
LARGEST MOTOR		0.25		
(C) CONTINOUS		1.25		
(N) NON-CONTINOUS		1.00		
(K) KITCHEN (NEC 220.56)		0.65		
(S) SPECIAL DEMAND		1.00		
(E) EXISTING LOAD (NEC 220.87)	6738 VA	1.25	8423 VA	23 A
TOTALS	**6738 VA**		**8423 VA**	
TOTAL AMPS AT 208Y/120V 3PH 4W WITH LCL:				**23 A**

SUBTOTAL	PHASE
2848 VA	A
2180 VA	B
1710 VA	C
6738 VA	TOTAL
19 A	AMPS

NOTES:
1. EXISTING BREAKER, EXISTING LOAD
2. NEW BREAKER, NEW LOAD

SINGLE LINE DIAGRAM & PANEL SCHEDULES | 1

GENERAL NOTES

1. REFER TO 'GENERAL NOTES' ON ELECTRICAL LEGENDS AND NOTES SHEET FOR WIRING METHODS, MATERIALS, AND REQUIREMENTS.
2. ALL CIRCUIT BREAKERS AND PANELBOARDS SHALL BE OF THE SAME MANUFACTURER.
3. THE FEEDER LENGTHS SHOWN ON THESE DRAWINGS ARE FOR CALCULATION PURPOSES ONLY AND ARE NOT VALID FOR BIDDING.
4. CONTRACTOR SHALL UPDATE ALL MODIFIED PANEL DIRECTORIES OR CREATE A NEW TYPED DIRECTORY, IF ONE DOES NOT EXIST, IDENTIFYING EACH CIRCUIT AND INSTALLED CIRCUIT LOADS. MOUNTED IN GLASS OR PLASTIC INSIDE DOOR.THE CONTRACTOR SHALL BE RESPONSIBLE FOR UPDATING DIRECTORIES TO INDICATE ALL NEW CIRCUITS AND ACTUAL AREA SERVED WHICH IS NOT NECESSARILY THE DESCRIPTION INDICATED ON THE BID DOCUMENTS. USE A COMPUTER OR TYPEWRITER TO CREATE DIRECTORY; HANDWRITTEN DIRECTORIES ARE NOT ACCEPTABLE.
5. EQUIPMENT DATA AND CONFIGURATIONS SHOWN ON THE SINGLE LINE DIAGRAM PROVIDE GENERAL EQUIPMENT INFORMATION. CONTRACTOR SHALL REVIEW ELECTRICAL PLANS AND SPECIFICATIONS TO VERIFY ALL EQUIPMENT ASSOCIATED DESIGN INFORMATION. THE CONTRACTOR IS RESPONSIBLE FOR PROVIDING ALL NECESSARY COMPONENTS REQUIRED FOR A COMPLETE AND OPERATIONAL INSTALLATION. ANY DISCREPANCIES BETWEEN DESCRIPTIONS, SPECIFICATIONS, AND EXISTING CONDITIONS MUST BE PRESENTED TO THE ENGINEER OF RECORD PRIOR TO COMPLETION OF THE BID PROCESS FOR CLARIFICATION. NO EQUIPMENT SHALL BE ORDERED UNTIL DISCREPANCIES ARE RESOLVED THROUGH A FORMAL RFI PROCESS.
6. GROUND ALL ELECTRICAL EQUIPMENT, BRANCH CIRCUITS, FEEDERS, PANEL AND DISTRIBUTION BOARDS, ELECTRICAL SERVICES, ETC. PER ADOPTED NEC ARTICLES 250.
7. ALL ELECTRICAL EQUIPMENT (I.E. SWITCHGEAR, DISTRIBUTION BOARDS, PANELBOARDS, DISCONNECT SWITCHES, ETC.) SHALL BE PROVIDED WITH A PHENOLIC NAMEPLATE WITH ENGRAVED LETTERS PER SPECIFICATIONS. ALL NAMEPLATES SHALL BE FASTENED WITH A MINIMUM OF TWO (2) MACHINE SCREWS. NO SELF ADHESIVE NAMEPLATES ARE ALLOWED.
8. ELECTRICAL CONTRACTOR TO INCLUDE IN BID ALL ASSOCIATED COSTS FOR THIRD PARTY TESTING OF ELECTRICAL EQUIPMENT, GROUND FAULT, CONDUCTORS, ETC.
9. CONTRACTOR SHALL FURNISH AND INSTALL MISSING FILLER PLATES IN PANELBOARD/SWITCHBOARD THAT IS BEING REUSED.
10. ALL CONDUCTOR TERMINATIONS SHALL BE TIGHTENED TO MANUFACTURER RECOMMENDATIONS USING AN APPROVED MEANS.
11. ALL ELECTRICAL EQUIPMENT SHALL BE IDENTIFIED WITH NAMEPLATES, REFER TO SPECIFICATIONS. IN ADDITION, EACH DISCONNECT MUST BE MARKED TO IDENTIFY ITS PURPOSE AND INCLUDE IDENTIFICATION OF CIRCUIT SOURCE THAT SUPPLIES DISCONNECTING MEANS. (110.22)

AGENCY APPROVAL DSA#

196
560 HIGUERA STREET, SUITE C
SAN LUIS OBISPO, CA 93401
TEL (805) 476-0399

CONSULTANTS

CIVIL ENGINEER
JMDiaz, Inc.
18645 East Gale Avenue, Suite 212
City of Industry, CA 91748
TEL (626) 820-1137

STRUCTURAL ENGINEER
T&B Engineering, Inc.
4344 Latham St., Suite 200
Riverside, CA 92501
TEL (951) 224-8665

ELECTRICAL ENGINEER
Design West Engineering
412 E Vanderbilt Way
San Bernardino, CA 92408
TEL (909) 890-3700

ARCHITECT STAMP: LICENSED ARCHITECT ALAN GLEN KROEKER C-22474 REN. 10-31-23 STATE OF CALIFORNIA

CONSULTANT STAMP: REGISTERED PROFESSIONAL ENGINEER BRADEN KERAMIDAS No. 22839 SIGNED:01/29/2025 ELECTRICAL STATE OF CALIFORNIA

REVISIONS

NO.	DATE	DESCRIPTION

THE ARCHITECT DOES NOT REPRESENT THAT THESE PLANS OR THE SPECIFICATIONS ARE SUITABLE FOR ANY SITE OTHER THAN THE ONE FOR WHICH THEY WERE SPECIFICALLY PREPARED. THE ARCHITECT DISCLAIMS RESPONSIBILITY FOR THESE PLANS AND SPECIFICATIONS IF THEY ARE USED IN WHOLE OR IN PART AT ANY OTHER SITE. WRITTEN DIMENSIONS ON THESE DRAWINGS SHALL HAVE PRECEDENCE OVER SCALED DIMENSIONS.

PROJECT OWNER & TITLE
CHINO BASIN WATER CONSERVATION DISTRICT
4594 San Bernardino St
Montclair, CA 91763

CHINO BASIN WCD AMPHITHEATER ROOF
4594 San Bernardino St,
Montclair, CA 91763

SHEET TITLE
SINGLE LINE DIAGRAM & PANEL SCHEDULES

DRAWN BY: RL/ JHSA JOB NUMBER: 023495.01

SHEET NO.
E-002

DATE: DECEMBER 04, 2024

100% CONSTRUCTION DOCUMENTS

DATE PLOTTED: 1/29/2025 2:10:59 PM FILE LOCATION: Autodesk Docs://24-209 CBWCD Waterwise/24-209 CBWCD Waterwise CC Amphitheater, MEP_Central_R24.rvt

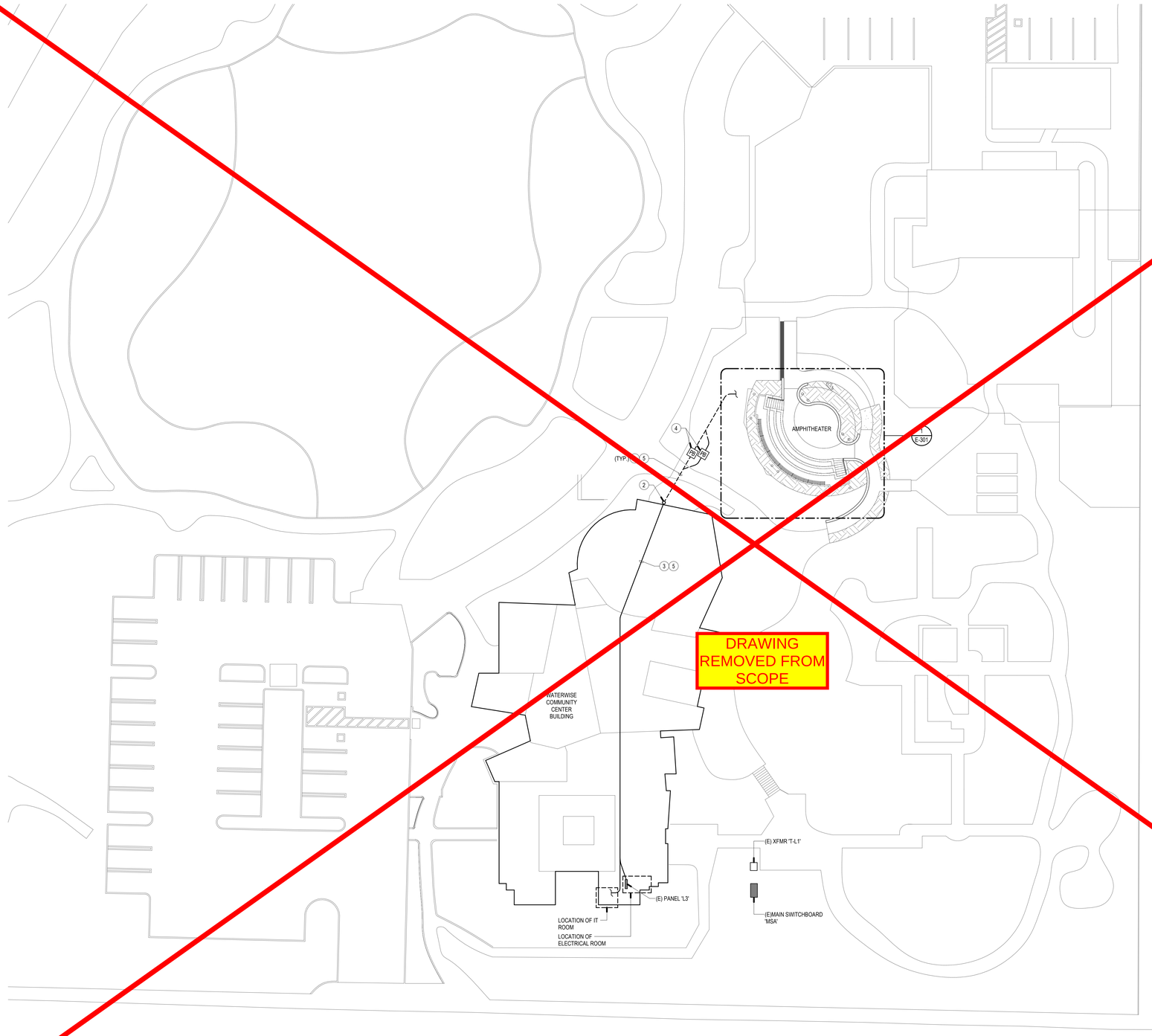

ELECTRICAL SITE PLAN | SCALE: 1" = 20'-0" | 1

GENERAL NOTES

1. COORDINATE TRENCH ROUTING AND EQUIPMENT LOCATIONS WITH EXISTING CONDITIONS AND NEW WORK.
2. ALL SITE BRANCH CIRCUIT WIRING SHALL BE #10 AWG. OR LARGER.
3. ALL SITE UNDERGROUND CONDUIT TO BE 1" MIN. UNLESS OTHERWISE NOTED.
4. SUPPORT CONDUIT(S) EVERY 10'-0" AND WITHIN 3'-0" OF ANY JUNCTION BOX OR TERMINATION.

CONSTRUCTION NOTES

1. SAWCUT, TRENCH AND EXCAVATE AS REQUIRED TO INSTALL CONDUIT AND FEEDERS AS INDICATED. BACKFILL, TAMP AND RESURFACE TO ORIGINAL CONDITION.
2. RISE UP CONDUIT ON EXTERIOR WALL AND PENETRATE BUILDING IN ACCESSIBLE CEILING OR ATTIC SPACE. SEAL ALL OPENINGS. PAINT CONDUIT AND ALL ASSOCIATED COMPONENTS TO MATCH SURROUNDING FINISH.
3. ROUTE CONDUIT ABOVE ACCESSIBLE CEILING SPACE WHERE REQUIRED.
4. PROVIDE AND INSTALL (2) PULLBOXES SIZED PER NEC. (1) LABELED 'ELECTRICAL' AND (1) LABELED 'COMMUNICATION' FOR SEPARATION OF POWER AND FUTURE DATA CABLING.
5. PROVIDE THE FOLLOWING CONDUIT INFRASTRUCTURE FOR FUTURE WORK:
   1. (2)1" CONDUIT ONLY FROM ELECTRICAL ROOM TO AMPHITHEATER AREA FOR ROUTING OF FUTURE LIGHTING AND POWER CIRCUITS.
   2. 2" CONDUIT ONLY FROM IT ROOM TO AMPHITHEATER AREA FOR ROUTING OF FUTURE DATA CABLING.

AGENCY APPROVAL DSA#

196
560 HIGUERA STREET, SUITE C
SAN LUIS OBISPO, CA 93401
TEL (805) 476-0399

CONSULTANTS

CIVIL ENGINEER
JMDiaz, Inc.
18645 East Gale Avenue, Suite 212
City of Industry, CA 91748
TEL (626) 820-1137

STRUCTURAL ENGINEER
T&B Engineering, Inc.
4344 Latham St., Suite 200
Riverside, CA 92501
TEL (951) 224-8665

ELECTRICAL ENGINEER
Design West Engineering
412 E Vanderbilt Way
San Bernardino, CA 92408
TEL (909) 890-3700

ARCHITECT STAMP: LICENSED ARCHITECT ALAN GLEN KROEKER C-22474 REN. 10-31-23 STATE OF CALIFORNIA

CONSULTANT STAMP: REGISTERED PROFESSIONAL ENGINEER JORDEN KENNEDY No. 22839 SIGNED:01/29/2025 ELECTRICAL STATE OF CALIFORNIA

REVISIONS

NO.	DATE	DESCRIPTION

THE ARCHITECT DOES NOT REPRESENT THAT THESE PLANS OR THE SPECIFICATIONS ARE SUITABLE FOR ANY SITE OTHER THAN THE ONE FOR WHICH THEY WERE SPECIFICALLY PREPARED. THE ARCHITECT DISCLAIMS RESPONSIBILITY FOR THESE PLANS AND SPECIFICATIONS IF THEY ARE USED IN WHOLE OR IN PART AT ANY OTHER SITE. WRITTEN DIMENSIONS ON THESE DRAWINGS SHALL HAVE PRECEDENCE OVER SCALED DIMENSIONS.

PROJECT OWNER & TITLE
CHINO BASIN WATER CONSERVATION DISTRICT
4594 San Bernardino St
Montclair, CA 91763

CHINO BASIN WCD AMPHITHEATER ROOF
4594 San Bernardino St,
Montclair, CA 91763

SHEET TITLE
ELECTRICAL SITE PLAN

DRAWN BY: RP/HH/SA JOB NUMBER: 023495.01

SHEET NO.
E-101

DATE: DECEMBER 04, 2024

100% CONSTRUCTION DOCUMENTS

DATE PLOTTED: 1/29/2025 2:11:00 PM FILE LOCATION: Autodesk Docs://24-209 CBWCD Waterwise/24-209 CBWCD Waterwise CC Amphitheater_MEP_Central_R24.rvt

PROJECT NORTH

3/8" = 1'
0 2 4 6

ELECTRICAL DEMOLITION PLAN | SCALE: 3/8" = 1'-0" | 1

GENERAL NOTES

1. REFER TO ELECTRICAL LEGENDS AND NOTES SHEET FOR ADDITIONAL DEMOLITION NOTES.

DEMOLITION NOTES

1 EXISTING ELECTRICAL DEVICE TO REMAIN AND BE PROTECTED IN PLACE.

AGENCY APPROVAL DSA#

196

560 HIGUERA STREET, SUITE C
SAN LUIS OBISPO, CA 93401
TEL (805) 476-0399

CONSULTANTS

CIVIL ENGINEER
JMDiaz, Inc.
18645 East Gale Avenue, Suite 212
City of Industry, CA 91748
TEL (626) 820-1137

STRUCTURAL ENGINEER
T&B Engineering, Inc.
4344 Latham St., Suite 200
Riverside, CA 92501
TEL (951) 224-8665

ELECTRICAL ENGINEER
Design West Engineering
412 E Vanderbilt Way
San Bernardino, CA 92408
TEL (909) 890-3700

ARCHITECT STAMP

LICENSED ARCHITECT
ALAN GLEN KROBKER
C-22474
REN. 10-31-23
STATE OF CALIFORNIA

CONSULTANT STAMP

REGISTERED PROFESSIONAL ENGINEER
STEVEN REYNOLDS
No. 22839
SIGNED:01/29/2025
ELECTRICAL
STATE OF CALIFORNIA

REVISIONS

NO.	DATE	DESCRIPTION

THE ARCHITECT DOES NOT REPRESENT THAT THESE PLANS OR THE SPECIFICATIONS ARE SUITABLE FOR ANY SITE OTHER THAN THE ONE FOR WHICH THEY WERE SPECIFICALLY PREPARED. THE ARCHITECT DISCLAIMS RESPONSIBILITY FOR THESE PLANS AND SPECIFICATIONS IF THEY ARE USED IN WHOLE OR IN PART AT ANY OTHER SITE. WRITTEN DIMENSIONS ON THESE DRAWINGS SHALL HAVE PRECEDENCE OVER SCALED DIMENSIONS.

PROJECT OWNER & TITLE
CHINO BASIN WATER CONSERVATION DISTRICT
4594 San Bernardino St
Montclair, CA 91763

CHINO BASIN WCD AMPHITHEATER ROOF
4594 San Bernardino St,
Montclair, CA 91763

SHEET TITLE
ELECTRICAL DEMOLITION PLAN - BUILDING A

DRAWN BY: RL/MH/SA JOB NUMBER: 023495.01

SHEET NO.
E-201

DATE: DECEMBER 04, 2024

100% CONSTRUCTION DOCUMENTS

DATE PLOTTED: 1/29/2025 2:11:00 PM FILE LOCATION: Autodesk Docs://24-209 CBWCD Waterwise/24-209 CBWCD Waterwise CC Amphitheater_MEP_Central_R24.rvt

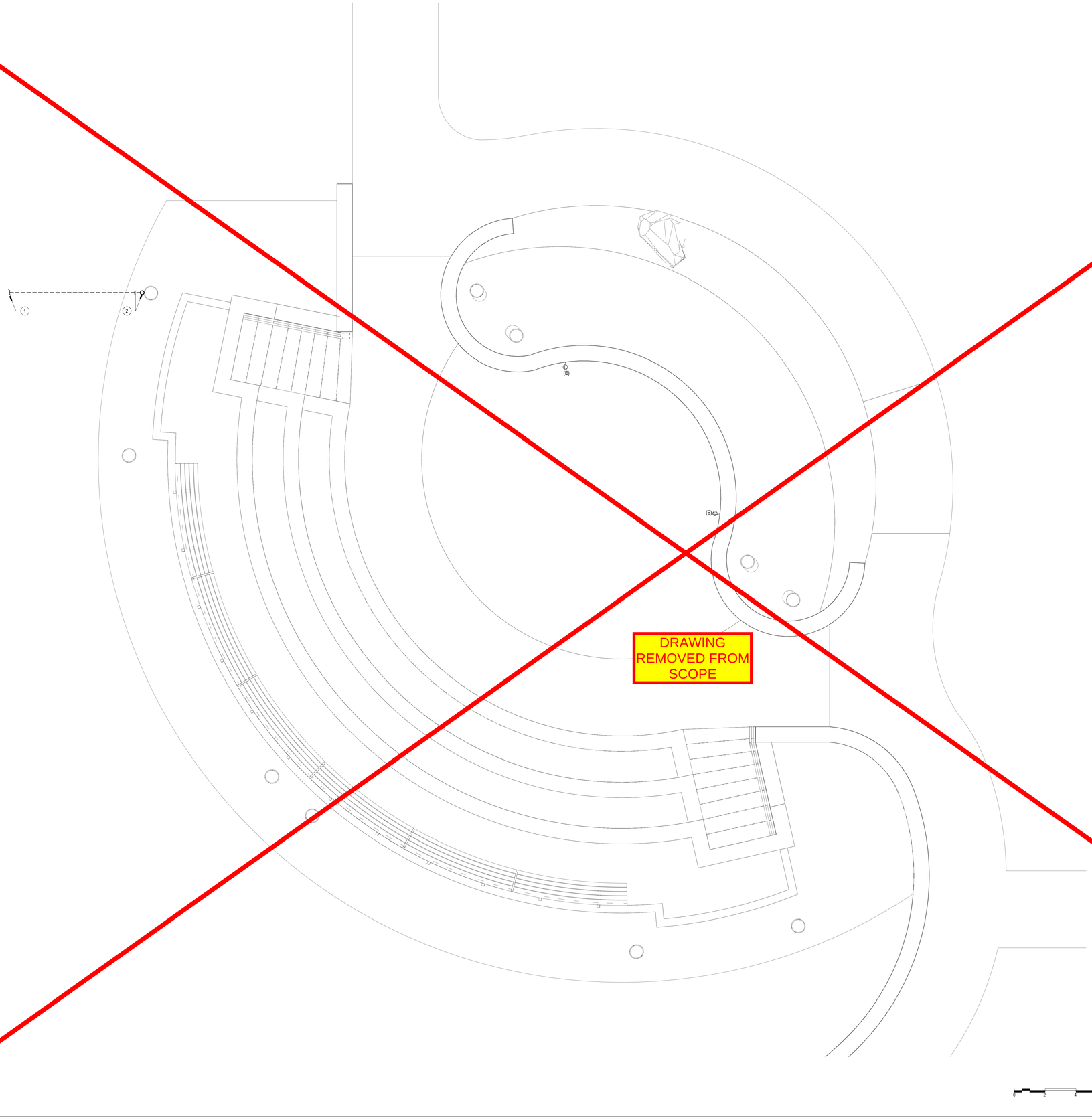

POWER & SIGNAL PLAN | SCALE: 3/8" = 1'-0" | 1

GENERAL NOTES

1. ALL SITE UNDERGROUND CONDUIT TO BE 1" MIN. UNLESS OTHERWISE NOTED.
2. SUPPORT CONDUIT(S) EVERY 10'-0" AND WITHIN 3'-0" OF ANY JUNCTION BOX OR TERMINATION.

CONSTRUCTION NOTES

1. REFER TO ELECTRICAL SITE PLAN ON SHEET E-101 FOR CONTINUATION.
2. ROUTE (2)1" & (1)2" CONDUIT ONLY TO STRUCTURAL COLUMN FOR ROUTING OF FUTURE LIGHTING/POWER CIRCUITS AND DATA CABLING. RISE UP COLUMN 6" ABOVE GRADE AND CAP FOR FUTURE USE.

AGENCY APPROVAL DSA#

196

560 HIGUERA STREET, SUITE C
SAN LUIS OBISPO, CA 93401
TEL (805) 476-0399

CONSULTANTS

CIVIL ENGINEER
JMDiaz, Inc.
18645 East Gale Avenue, Suite 212
City of Industry, CA 91748
TEL (626) 820-1137

STRUCTURAL ENGINEER
T&B Engineering, Inc.
4344 Latham St., Suite 200
Riverside, CA 92501
TEL (951) 224-8665

ELECTRICAL ENGINEER
Design West Engineering
412 E Vanderbilt Way
San Bernardino, CA 92408
TEL (909) 890-3700

ARCHITECT STAMP

LICENSED ARCHITECT
ALAN GLEN KROBER
C-22474
REN. 10-31-23
STATE OF CALIFORNIA

CONSULTANT STAMP

REGISTERED PROFESSIONAL ENGINEER
STEVEN ROSS
No. 22839
SIGNED:01/29/2025
ELECTRICAL
STATE OF CALIFORNIA

REVISIONS

NO.	DATE	DESCRIPTION

THE ARCHITECT DOES NOT REPRESENT THAT THESE PLANS OR THE SPECIFICATIONS ARE SUITABLE FOR ANY SITE OTHER THAN THE ONE FOR WHICH THEY WERE SPECIFICALLY PREPARED. THE ARCHITECT DISCLAIMS RESPONSIBILITY FOR THESE PLANS AND SPECIFICATIONS IF THEY ARE USED IN WHOLE OR IN PART AT ANY OTHER SITE. WRITTEN DIMENSIONS ON THESE DRAWINGS SHALL HAVE PRECEDENCE OVER SCALED DIMENSIONS.

PROJECT OWNER & TITLE
CHINO BASIN WATER CONSERVATION DISTRICT
4594 San Bernardino St
Montclair, CA 91763

CHINO BASIN WCD AMPHITHEATER ROOF
4594 San Bernardino St,
Montclair, CA 91763

SHEET TITLE
POWER & SIGNAL PLAN - BUILDING A

DRAWN BY: RU/AMSA JOB NUMBER: 023495.01

SHEET NO.
E-301

DATE: DECEMBER 04, 2024

100% CONSTRUCTION DOCUMENTS

DATE PLOTTED: 1/29/2025 2:11:00 PM FILE LOCATION: Autodesk Docs://24-209 CBWCD Waterwise/24-209 CBWCD Waterwise CC Amphitheater_MEP_Central_R24.rvt

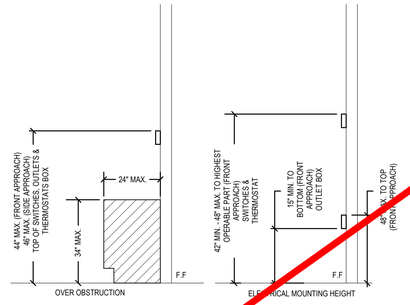

GENERAL NOTES:

1. FORWARD OF FRONT APPROACH FOR DEVICE MOUNTED ABOVE COUNTER ASSUME THAT DIRECTLY BELOW DEVICE, THE COUNTER HAS A 30" MIN. WIDTH X 27" MIN. HIGH X 19" MIN. DEEP CLEAR OPENING

ACCESSIBLE DEVICE MOUNTING HEIGHT DETAIL 1

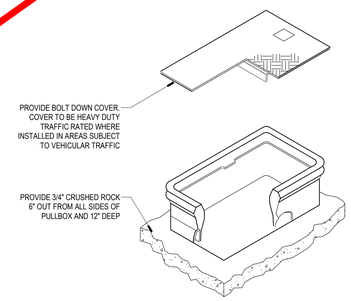

GENERAL NOTES:

1. PULLBOX TO BE SIZED PER NEC, U.O.N.
2. PROVIDE COVER LABELED WITH "POWER" OR "DATA" DESIGNATION

PULLBOX INSTALLATION 2

DRAWING REMOVED FROM SCOPE

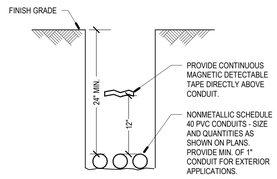

GENERAL NOTES:

1. PLACE CONDUIT IN TRENCH, FILL, AND COMPACT TO 90%. REPAIR AREA TO MATCH SURROUNDING. BACK FILL IS TO BE FREE OF LARGE ROCK, PAVING MATERIALS, ETC., THAT MAY CAUSE PHYSICAL DAMAGE TO CONDUIT. PROVIDE GRANULAR MATERIAL WITH A SAND EQUIVALENT (SE) GREATER THAN 30 PER COUNTY OF RIVERSIDE STANDARDS.
2. PROVIDE 30" MINIMUM COVER WHERE CONDUIT IS PLACED UNDER STREETS, HIGHWAYS, ROADS, ALLEYS, DRIVEWAYS, AND PARKING LOTS.
3. CONDUITS PLACED UNDER OR IN STRUCTURAL FOOTINGS SHALL BE GALVANIZED RIGID METAL (RMC) WRAPPED WITH 20 MIL PVC TAPE. THE COUPLINGS CONNECTED TO THE RMC ELBOW SHALL BE GALVANIZED MATERIAL.

CONDUIT BURIAL 3

AGENCY APPROVAL DSA#

196
560 HIGUERA STREET, SUITE C
SAN LUIS OBISPO, CA 93401
TEL (805) 476-0399

CONSULTANTS

CIVIL ENGINEER
JMDiaz, Inc.
18645 East Gale Avenue, Suite 212
City of Industry, CA 91748
TEL (626) 820-1137

STRUCTURAL ENGINEER
T&B Engineering, Inc.
4344 Latham St., Suite 200
Riverside, CA 92501
TEL (951) 224-8665

ELECTRICAL ENGINEER
Design West Engineering
412 E Vanderbilt Way
San Bernardino, CA 92408
TEL (909) 890-3700

ARCHITECT STAMP

LICENSED ARCHITECT ALAN GLEN KROBER C-22474 REN. 10-31-23 STATE OF CALIFORNIA

CONSULTANT STAMP

REGISTERED PROFESSIONAL ENGINEER STEPHEN RICHARDS No. 22839 SIGNED:01/29/2025 ELECTRICAL STATE OF CALIFORNIA

REVISIONS

NO.	DATE	DESCRIPTION

THE ARCHITECT DOES NOT REPRESENT THAT THESE PLANS OR THE SPECIFICATIONS ARE SUITABLE FOR ANY SITE OTHER THAN THE ONE FOR WHICH THEY WERE SPECIFICALLY PREPARED. THE ARCHITECT DISCLAIMS RESPONSIBILITY FOR THESE PLANS AND SPECIFICATIONS IF THEY ARE USED IN WHOLE OR IN PART AT ANY OTHER SITE. WRITTEN DIMENSIONS ON THESE DRAWINGS SHALL HAVE PRECEDENCE OVER SCALED DIMENSIONS.

PROJECT OWNER & TITLE
CHINO BASIN WATER CONSERVATION DISTRICT
4594 San Bernardino St
Montclair, CA 91763

CHINO BASIN WCD AMPHITHEATER ROOF
4594 San Bernardino St,
Montclair, CA 91763

SHEET TITLE
ELECTRICAL DETAILS

DRAWN BY: TH/SA JOB NUMBER: 023495.01

SHEET NO.
E-401

DATE: DECEMBER 04, 2024

100% CONSTRUCTION DOCUMENTS

DATE PLOTTED: 1/29/2025 2:11:01 PM FILE LOCATION: Autodesk Docs://24-209 CBWCD Waterwise/24-209 CBWCD Waterwise CC Amphitheater_MEP_Central_R24.rvt

ELECTRICAL SPECIFICATIONS

PART 1 GENERAL

1.01 SCOPE OF WORK

A. WORK COVERED BY THIS SECTION CONSISTS OF FURNISHING ALL LABOR, EQUIPMENT, SUPPLIES, AND MATERIALS, UNLESS OTHERWISE SPECIFIED, AND IN PERFORMING ALL OPERATIONS NECESSARY FOR THE INSTALLATION OF A COMPLETE AND OPERABLE ELECTRICAL SYSTEM AS REQUIRED BY THESE SPECIFICATIONS AND AS INDICATED ON THE DRAWINGS.

B. THE CONTRACTOR SHALL EXAMINE ALL DRAWINGS AND SPECIFICATIONS IN A MANNER TO BE FULLY COGNIZANT OF ALL WORK REQUIRED UNDER THIS SECTION.

C. THE CONTRACTOR SHALL OBTAIN AND PAY FOR ALL REQUIRED PERMITS UNLESS OTHERWISE ARRANGED AND SCHEDULE ALL REQUIRED INSPECTIONS FOR THE EXECUTION OF THE WORK UNDER THIS CONTRACT.

1.02 GENERAL REQUIREMENTS

A. WORK DONE UNDER THIS SECTION SHALL COMPLY WITH THE LATEST EDITION OF THE CALIFORNIA ELECTRICAL CODE, NEC (NATIONAL ELECTRICAL CODE), THE STATE OF CALIFORNIA TITLE 24, THE STATE BUILDING STANDARDS, (OSHA) OCCUPATIONAL SAFETY AND HEALTH ADMINISTRATION, AND TO ANY APPLICABLE LOCAL JURISDICTIONAL REQUIREMENTS. IN CASE OF CONFLICT BETWEEN REQUIREMENT, THE MOST RESTRICTIVE SHALL APPLY.

1.03 ELECTRICAL CONTRACTOR'S RESPONSIBILITY

A. IT SHALL BE THE CONTRACTOR'S RESPONSIBILITY TO OBTAIN A COMPLETE SET OF DRAWINGS AND SPECIFICATIONS. CONTRACTOR SHALL CHECK THE DRAWINGS OF THE OTHER TRADES AND SHALL CAREFULLY READ THE ENTIRE SPECIFICATIONS AND DETERMINE HIS RESPONSIBILITIES.

B. BEFORE SUBMITTING THE BID, THE ELECTRICAL CONTRACTOR SHALL VISIT THE JOB SITE AND FULLY ACQUAINT HIMSELF WITH EXISTING CONDITIONS. IT IS THE RESPONSIBILITY OF THE CONTRACTOR TO INSTALL THE EQUIPMENT AND ASSOCIATED WIRING IN SUCH A MANNER AS TO CONFORM WITH THE EXISTING STRUCTURE OF THE BUILDING, AVOID OBSTRUCTIONS, AND MEET APPLICABLE CODE REQUIREMENTS.

C. THE INTENT OF THESE DRAWINGS IS TO DESCRIBE A COMPLETE AND OPERABLE SYSTEM. WHERE EXISTING CONDITIONS DIFFER FROM DRAWINGS, ADJUSTMENT SHALL BE MADE AND ALLOWANCES INCLUDED FOR ALL NECESSARY EQUIPMENT TO COMPLETE ALL PARTS OF THE DRAWINGS AND SPECIFICATIONS. BRING ANY QUESTIONS TO THE ARCHITECT OR ENGINEER'S ATTENTION PRIOR TO BIDDING.

D. WHEREVER A DISCREPANCY IN QUANTITY OR SIZE OF CONDUIT, WIRE, EQUIPMENT, DEVICES, CIRCUIT BREAKERS, ETC., ARISES ON THE DRAWING AND/OR SPECIFICATION, THE CONTRACTOR SHALL BE RESPONSIBLE FOR PROVIDING AND INSTALLING ALL MATERIAL AND SERVICES REQUIRED BY THE STRICTEST CONDITION NOTED ON DRAWINGS AND/OR IN SPECIFICATIONS TO ENSURE COMPLETE AND OPERABLE SYSTEMS AS REQUIRED BY THE OWNER AND ENGINEER.

1.04 WORK NOT INCLUDED

A. CERTAIN LABOR, MATERIALS, OR EQUIPMENT MAY BE FURNISHED UNDER OTHER CONTRACTS BY THE OWNER. WHEN SUCH IS THE CASE, THE EXTENT, SOURCE, AND DESCRIPTION OF THESE ITEMS WILL BE INDICATED ON THE DRAWINGS OR DESCRIBED IN THE SPECIFICATIONS. UNLESS OTHERWISE NOTED, ALL LABOR, MATERIALS AND EQUIPMENT FOR THE COMPLETE INSTALLATION OF THE ELECTRICAL WORK SHALL BE PROVIDED UNDER THIS SECTION OF THESE SPECIFICATIONS.

1.05 SPECIAL REQUIREMENTS

A. THE DRAWINGS INDICATE GENERAL ARRANGEMENT OF CIRCUITS, OUTLETS, LOCATIONS OF MOTOR CONTROLLERS WITH DISCONNECTS, PANELBOARDS, CONDUIT LIGHTING, AND OTHER WORK. INFORMATION SHOWN ON THE DRAWINGS IS ESSENTIALLY DIAGRAMMATIC; HOWEVER, RECIRCUITING OR RELOCATING ELECTRICAL EQUIPMENT WILL NOT BE PERMITTED WITHOUT SPECIFIC WRITTEN APPROVAL OF THE ENGINEER.

1.06 SUBMITTALS

A. AFTER AWARD OF THE CONTRACT AND BEFORE ANY MATERIALS ARE DELIVERED TO THE JOB SITE, A COMPLETE LIST OF ALL MATERIALS PROPOSED TO BE FURNISHED AND INSTALLED UNDER THIS SECTION MUST BE PROVIDED.

B. SUBMIT TO THE ENGINEER FOR APPROVAL ONE PRINT AND ONE REPRODUCIBLE OF ALL LIGHTING FIXTURES, SWITCHGEAR, PANELBOARDS, CONDUIT, CONDUCTORS, AND PULLBOXES. SHOP DRAWINGS SHALL INCLUDE MANUFACTURER'S PRINTED INFORMATION FOR EACH OF THESE ITEMS IDENTIFIED ON THE DRAWINGS. THE INFORMATION SHALL INCLUDE, AS MINIMUM, OVERALL DIMENSIONS, WEIGHT, PHASE, VOLTAGE RATINGS, WIRING DIAGRAMS, AND NAMEPLATE DATA.

1.07 STANDARDS AND MATERIALS

A. ALL MATERIALS SHALL CONFORM WITH THE CURRENT APPLICABLE INDUSTRY STANDARDS, NEMA (NATIONAL ELECTRICAL MANUFACTURER'S ASSOCIATION), ANSI (AMERICAN NATIONAL STANDARDS INSTITUTE), IPCEA (INSULATED POWER CABLE ENGINEERS ASSOCIATION), IEEE (INSTITUTE OF ELECTRICAL AND ELECTRONIC ENGINEERS), NATIONAL ELECTRICAL SAFETY CODE.

B. UNLESS OTHERWISE INDICATED, ALL MATERIALS SHALL BE UNDERWRITERS LABORATORIES LISTED AND LABELED, OR CERTIFIED BY A NATIONALLY RECOGNIZED TESTING LABORATORY.

C. WORKMANSHIP AND NEAT APPEARANCE SHALL BE AS IMPORTANT AS THE ELECTRICAL AND MECHANICAL EFFICIENCY. DEFECTIVE AND DAMAGED MATERIALS SHALL BE REPLACED OR REPAIRED PRIOR TO FINAL APPROVAL AND ACCEPTANCE. THE DRAWINGS AND SPECIFICATIONS TAKE PRECEDENCE WHEN THEY ARE MORE STRINGENT THAN CODES, STATUTES, OR ORDINANCES IN EFFECT. APPLICABLE CODES, STANDARDS, ORDINANCES, AND STATUTES TAKE PRECEDENCE WHEN THEY ARE MORE STRINGENT OR CONFLICT WITH THE DRAWINGS OR SPECIFICATIONS.

1.08 DELIVERY AND STORAGE OF MATERIALS

A. THE CONTRACTOR SHALL INVESTIGATE EACH SPACE IN THE BUILDING THROUGH WHICH EQUIPMENT MUST PASS TO REACH ITS FINAL LOCATIONS. IF NECESSARY, THE MANUFACTURER SHALL BE REQUIRED TO SHIP HIS MATERIAL IN SECTIONS, SIZED TO PERMIT PASSING THROUGH SUCH RESTRICTED AREAS IN THE BUILDING.

B. THE CONTRACTOR SHALL RETAIN IN HIS POSSESSION AND SHALL BE RESPONSIBLE FOR ALL PORTABLE AND DETACHABLE PARTS OR PORTIONS OF INSTALLATIONS SUCH AS FUSES, KEY LOCKS, ADAPTERS, BLOCKING CLIPS, AND INSERTS UNTIL FINAL COMPLETION OF WORK. THESE PARTS SHALL BE DELIVERED TO THE OWNER UPON COMPLETION OF THE WORK.

PART 2 PRODUCTS

2.01 EQUIPMENT AND MATERIALS

A. ALL MATERIALS FURNISHED AND INSTALLED UNDER THIS CONTRACT SHALL BE NEW, FREE FROM DEFECTS, AND SHALL BE GUARANTEED FOR A PERIOD OF ONE (1) YEAR FROM DATE OF ACCEPTANCE OF THE WORK. SHOULD ANY TROUBLE DEVELOP DURING THIS PERIOD DUE TO DEFECTIVE MATERIALS OR FAULTY WORKMANSHIP, THE CONTRACTOR SHALL FURNISH ALL NECESSARY MATERIALS AND LABOR TO CORRECT THE TROUBLE WITHOUT ANY COST TO THE OWNER. ANY DEFECTIVE MATERIAL OR INFERIOR WORKMANSHIP NOTED AT THE TIME OF INSTALLATION SHALL BE CORRECTED IMMEDIATELY TO THE SATISFACTION OF THE OWNER.

B. ALL MAJOR EQUIPMENT COMPONENTS SHALL HAVE THE MANUFACTURER'S NAME, ADDRESS, MODEL NUMBER, AND SERIAL NUMBER PERMANENTLY ATTACHED IN A CONSPICUOUS MANNER.

2.02 CONDUIT

A. PROVIDE RACEWAYS AS INDICATED ON THE DRAWINGS AND AS HEREIN SPECIFIED. CONDUITS SHALL BE RIGID STEEL "GRC" (THICK WALL) GALVANIZED; ELECTRICAL METALLIC TUBING "EMT" (THIN WALL); FLEXIBLE STEEL, GALVANIZED; LIQUID-TIGHT, FLEXIBLE STEEL CONDUIT WITH GROUND BOND OR SCHEDULE 40 PVC.

B. ALL EMPTY UNDERGROUND CONDUITS SHALL BE SCHEDULE 40 PVC UNLESS OTHERWISE INDICATED ON THE DRAWING. ABOVE GROUND EMPTY CONDUITS SHALL BE EMT OR GRC AS REQUIRED BY CODE.

C. WHERE CONDUIT CROSSES AN EXPANSION JOINT, PROVIDE APPROVED FITTINGS WHICH ALLOW DEFLECTIONS EQUIVALENT TO TWICE THE MOVEMENT ALLOWED BY THE DESIGN.

2.03 CONDUCTORS

A. PROVIDE A COMPLETE SYSTEM OF CONDUCTORS IN RACEWAY SYSTEMS AS SHOWN ON THE DRAWINGS AND THEN HEREIN SPECIFIED.

B. LIGHTING AND POWER CONDUCTORS SHALL BE COPPER, 600 VOLT, TYPE THWN/THHN, NO. 12 MINIMUM UNLESS OTHERWISE NOTED.

C. CONTROL CONDUCTORS SHALL BE 600V, TYPE THWN/THHN, NO.14 MINIMUM SIZE UNLESS OTHERWISE NOTED.

2.04 FITTINGS

A. CONNECTOR, COUPLING, LOCKNUT, BUSHINGS AND CAPS USED WITH RIGID CONDUIT SHALL BE STEEL, THREADED AND GALVANIZED. BUSHINGS SHALL BE INSULATED.

B. EMT FITTINGS, CONNECTORS AND COUPLINGS SHALL BE STEEL, ZINC, OR CADMIUM PLATED, COMPRESSION TYPE, WITH INSULATED THROAT.

C. FLEXIBLE STEEL CONDUIT CONNECTORS SHALL BE TWIST-IN-TYPE WITH INSULATED THROAT. THE FINISH SHALL BE ZINC OR CADMIUM PLATING.

D. EMT CONDUIT FITTINGS SHALL BE THE COMPRESSION TYPE; SET SCREW FITTINGS SHALL NOT BE USED.

2.05 JUNCTION AND PULL BOXES

A. FOR INTERIOR DRY LOCATIONS, BOXES SHALL BE GALVANIZED ONE-PIECE DRAWN STEEL, KNOCKOUT TYPE WITH REMOVABLE, MACHINE SCREW SECURED COVERS.

B. FOR EXTERIOR WET LOCATIONS, BOXES SHALL BE NEMA 3R OR NEMA 4 RATED, GASKET MACHINE SCREW SECURED COVERS.

C. INGROUND PULLBOXES SHALL BE CONCRETE ELECTRICAL PULL BOX WITH LID APPROPRIATE FOR INSTALLATION LOCATION. SIZE PULLBOX PER NEC REQUIREMENTS.

D. ALL BOXES SHALL BE SIZED FOR THE NUMBER AND SIZES OF CONDUCTORS AND CONDUITS ENTERING THE BOX AND EQUIPPED WITH PLASTER RINGS WHERE REQUIRED.

2.06 OUTLET BOXES

A. FOR FIXTURES, BOXES SHALL BE GALVANIZED, ONE-PIECE DRAWN STEEL, KNOCKOUT TYPE EQUIPPED WITH 3/8" FIXTURE STUDS AND PLASTER RINGS WHERE REQUIRED.

B. FOR CONVENIENCE OUTLETS, WALL SWITCHES, OR OTHER DEVICES, OUTLET BOXES SHALL BE GALVANIZED ONE-PIECE DRAWN STEEL, KNOCKOUT TYPE 4"X4"X1-1/2" MINIMUM.

C. FOR LOCATIONS WHERE STANDARD BOXES ARE NOT SUITABLE, SPECIAL BOXES SHALL BE DESIGNED TO FIT SPACE OR MEET OTHER REQUIREMENTS AND SUBMITTED FOR APPROVAL.

2.07 SWITCHES

A. ALL DEVICES SHALL CONFORM TO NATIONAL ELECTRICAL MANUFACTURER'S ASSOCIATION (NEMA) STANDARDS AND SHALL BE UNDERWRITERS' LABORATORIES, INC., (UL) LISTED AND LABELED AND SHALL BE "SPECIFICATION GRADE," MEETING THE REQUIREMENTS OF FEDERAL SPECIFICATION WS-896-E, FOR SWITCHES.

1. WALL SWITCHES SHALL BE SPECIFICATION COMMERCIAL GRADE (MINIMUM), FULLY ENCLOSED, QUIET-TYPE TUMBLER SWITCHES RATED 20 AMPERES, 120/277-VOLT, BAKELITE OR COMPOSITION, BACK AND SIDE WIRED, BUMPER PAD, FULL RATING FOR INDUCTIVE OR NON-INDUCTIVE LOADS AND INCANDESCENT OR FLUORESCENT LIGHTING LOADS.

2. SINGLE POLE SWITCHES: G.E. 59511, HUBBELL #1221, ARROW #1991 OR PASS & SEYMOUR 20AC1.

3. THREE-WAY QUIET SWITCHES: G.E. 59531, HUBBELL #1223, ARROW #1993 OR PASS& SEYMOUR 20AC3.

4. WALL SWITCH AND PILOT LIGHTS SHALL BE FLUSH MOUNTED COMBINATION WALL TYPE WITH SWITCH AND PILOT LIGHT EQUIPPED WITH A 6-WATT, 125-VOLT CANDELABRA BASE LAMP. THE PILOT LIGHT SHALL HAVE A GREEN JEWEL WITH BRASS RIM FLUSH MOUNTED IN THE WALL PLATE.

5. ALL SWITCHES SHALL BE OF THE SAME MANUFACTURE.

6. NORMAL SWITCH COLOR IS WHITE APPROVED BY ARCHITECT/OWNER. SWITCHES CONTROLLING CIRCUITS CONNECTED TO EMERGENCY POWER SOURCE SHALL BE RED.

7. 30 AMP MOTOR RATED SNAP SWITCHES SHALL BE LEVITON MS302-DS. PROVIDED IN NEMA 1 OR 3R ENCLOSURE AS SHOWN ON DRAWING.

B. SENSOR SWITCH (MOTION SENSOR)

1. WALL SENSOR SWITCH SHALL BE WATT STOPPER DUAL TECHNOLOGY OCCUPANCY SENSOR LEVITON MODEL #OSSMT-GD (FOR SINGLE POLE SWITCHING) & LEVITON MODEL #OSSMD-GD FOR (DUAL SWITCHING).

2. CEILING SENSOR SWITCH SHALL BE WATT STOPPER DUAL-TECHNOLOGY MODE.

3. PROVIDE 120/277V CEILING SENSOR POWER PACK INSTALLED IN J-BOX NEXT TO LIGHTING CIRCUIT.

2.08 RECEPTACLES

A. DUPLEX RECEPTACLES SHALL BE SPECIFICATION GRADE, 20 AMPS, 125 VOLTS, 3-WIRE, SIDE-WIRED WITH BINDING SCREWS, PARALLEL SLOTS, U-GROUND, PLASTER EARS AND CAPTIVE MOUNTING SCREWS. BODY SHALL BE PHENOLIC, PLASTIC, OR BAKELITE. RECEPTACLES SHALL BE HEAVY-DUTY, 3-BLADE CURRENT CARRYING CONTACT AND DOUBLEWIDE FLAT BLADE GROUND CONTACTS. PROVIDE ARROW HART 5242-I HUBBELL 5242-I OR LEVITON 5242-I. INSTALL GROUND PIN UP.

B. SINGLE RECEPTACLES SHALL BE SPECIFICATION GRADE, GROUNDING TYPE, SIDE-WIRED, WITH BINDING SCREWS, AND SHALL HAVE STANDARD SIZE IVORY BAKELITE BASE. FOR CIRCUITS CONSISTING OF ONE SINGLE RECEPTACLE ONLY, AMPERE RATING OF RECEPTACLE SHALL BE THE SAME AS CIRCUIT BREAKER OF FUSE. FOR RECEPTACLES RATED 15 AMPS/125 VOLTS, PROVIDE NEMA 5-15R, ARROW-HART 5251-I. FOR RECEPTACLES RATED 20 AMPS / 125 VOLTS, PROVIDE NEMA 5-20R, ARROW-HART 5721-I, OR EQUAL. INSTALL GROUND PIN UP.

2.09 DEVICE PLATES

1. PROVIDE PLATES FOR ALL SWITCHES, RECEPTACLES, JUNCTION BOXES, TELEPHONE AND OTHER OUTLETS.

2. PROVIDE ENGRAVED OR ETCHED PLATES FOR ALL LOCK SWITCHES, PILOT SWITCHES, SWITCHES FROM WHICH EQUIPMENT OR CIRCUIT CONTROLLED CANNOT BE READILY SEEN, THREE OR MORE SWITCHES UNDER A COMMON PLATE AND FOR SWITCHES AS INDICATED.

3. STAINLESS STEEL PLATES SHALL BE AMERICAN IRON AND STEEL INSTITUTE (AISI) TYPE 302, WITH BEVELED EDGES, 0.040" THICK WITH SATIN SMOOTH FINISH. "SMOOTHE," HUBBELL #97071 SERIES.

4. PLASTIC COVER PLATE SHALL BE HIGH IMPACT THERMOPLASTIC, HIGH STRENGTH, SCRATCH-RESISTANT, SMOOTH AND SELF-EXTINGUISHING, HUBBELL "P9" SERIES OR PASS & SEYMOUR RP SERIES.

5. WHERE OUTLETS ARE INDICATED TO BE WEATHERPROOF, PROVIDE AN AISI TYPE 302 STAINLESS WITH DOUBLE HINGED COVERS, PASS & SEYMOUR #WPD-8.

6. GALVANIZED STEEL PLATES SHALL BE SQUARE OR RECTANGULAR AND HOT DIPPED GALVANIZED OR SHERARDIZED, BEVELED EDGES AND 0.040" THICK. GALVANIZED STEEL PLATES SHALL BE USED IN UTILITY AREA.

7. PROVIDE PLATES EQUIPPED WITH CLOSE FITTING OPENINGS FOR THE EXACT DEVICE TO BE USED. PROVIDE PLATES FOR TELEPHONE OUTLETS EQUIPPED WITH BUSHED OPENINGS.

8. REFER TO SECTION 3.08 FOR LABELING OF PLATES.

9. COVER PLATES ON PRESSED STEEL OUTLET BOXES IN FURRED AREAS, ATTICS, ETC., OR EXPOSED IN MECHANICAL EQUIPMENT ROOMS SHALL BE OF THE SAME MATERIAL AS THE OUTLET BOX.

10. COVER PLATES IN LOCATIONS CONCEALED FROM PUBLIC VIEW SHALL HAVE THE CIRCUIT NUMBERS AND SOURCE FEED POINT HAND LABELED WITH MARKING BLACK PEN (PERMANENT MARKER). SEE SECTION 3.08 FOR LABELING.

11. PROVIDE PLASTIC COVER PLATES UNLESS NOTED OTHERWISE

2.10 PANELBOARDS

A. FURNISH AND INSTALL ALL BRANCH CIRCUIT PANELBOARDS AS HEREINAFTER SPECIFIED AND AS SHOWN ON THE DRAWINGS. PANELBOARDS SHALL BE OF THE DEAD FRONT SAFETY TYPE EQUIPPED WITH THE THERMAL MAGNETIC 40°C CIRCUIT BREAKERS.

B. CIRCUIT BREAKERS SHALL BE BOLT-ON TYPE, RATED MINIMUM 10,000 AMPS RMS SYMMETRICAL INTERRUPTING CAPACITY AND SHALL BE THE NUMBER OF POLES AND CURRENT CAPACITY AS INDICATED ON THE PANEL SCHEDULE. BRANCH CIRCUIT PANELBOARDS SHALL BE SQUARE-D OR EATON/CUTLER HAMMER WITH LUGS UL LISTED FOR USE WITH 75 °C WIRE.

C. DOOR SHALL HAVE A PLASTIC COVERED DIRECTORY FRAME WITH A TYPED IDENTIFICATION CARD FOR ALL CIRCUIT AND PANEL NUMBERS FOR BRANCH CIRCUIT PANELBOARDS.

D. PROVIDE NAMEPLATE FOR ALL PANELBOARDS, ENGRAVED WHITE LETTERS ON BLACK BACKGROUND INSTALL NAME PLATES ON THE TRIM ABOVE DOOR.

E. ALL WIRING SHALL BE NEATLY ARRANGED AND LACED TOGETHER.

F. BUS BARS SHALL BE RECTANGULAR IN CROSS SECTION CONSTRUCTED OF COPPER. NEUTRAL AND GROUND BUSES SHALL BE FULL SIZE.

2.11A INTERIOR LIGHTING FIXTURES (NOT USED.)

2.11B EXTERIOR LIGHTING FIXTURES (NOT USED.)

2.12 LOW VOLTAGE SWITCHGEAR (NOT USED.)

2.13 CIRCUIT AND MOTOR DISCONNECTS

A. DISCONNECT (SAFETY) SWITCHES SHALL BE FUSED, HEAVY DUTY TYPE SWITCHES MEETING NEMA SPECIFICATIONS. SWITCHES SHALL BE PROVIDED WITH DISTRIBUTION TYPE FUSE BLOCKS. PROVIDE SWITCHES WITH THE NUMBER OF POLES, THE VOLTAGE, CURRENT AND HORSEPOWER RATINGS AS REQUIRED. PROVIDE EXTERNALLY OPERABLE QUICK-MAKE, QUICK-BREAK TYPE MECHANISM WITH COVER INTERLOCK AND PADLOCKABLE IN EITHER THE OPEN OR CLOSED POSITION.

B. SWITCHES SHALL BE NEMA 3R (RAIN TIGHT ENCLOSURE) WHERE INDICATED TO BE OUTDOORS WEATHERPROOF.

C. PROVIDE NAMEPLATE INDICATING EQUIPMENT SERVED. ALL GENERAL SNAP SWITCHES OPERATING MOTOR LOADS SHALL BE HORSEPOWER RATED OR BE RATED AT LEAST 125% OF THE FULL LOAD CURRENT.

2.14 TRANSFORMERS (NOT USED.)

2.15 ELECTRICAL CONNECTIONS (NOT USED.)

2.16 SUPPORTING DEVICES

A. ALL EQUIPMENT CONDUITS SHALL BE SUPPORTED, ANCHORED AND BRACED IN ACCORDANCE WITH THE MOST STRINGENT CODES AND REQUIREMENTS. COMPLY WITH CHAPTER 23 OF THE LATEST CBC (CALIFORNIA BUILDING CODE).

PART 3 EXECUTION

3.01 WORKMANSHIP AND COMPLETION OF INSTALLATION

A. WORKMANSHIP AND NEAT APPEARANCE SHALL BE AS IMPORTANT AS THE ELECTRICAL AND MECHANICAL EFFICIENCY. DEFECTIVE AND DAMAGED MATERIALS SHALL BE REPLACED OR REPAIRED PRIOR TO FINAL INTERPRETATION AS INCLUDED. ANY DEFICIENCY PERTAINING TO EITHER WORKMANSHIP OR MATERIALS FOUND BY THE INSPECTOR SHALL BE CORRECTED WITHOUT ADDITIONAL COST TO THE OWNER.

B. THE CONTRACTOR SHALL MAINTAIN ON JOB SITE A SET OF THE WORKING DRAWINGS WHICH SHALL BE UPDATED DAILY IN DETAIL FOR WORK ACCOMPLISHED. UPON COMPLETION OF THE WORK, A SET OF REPRODUCIBLE CONTRACT DRAWINGS SHALL BE OBTAINED FROM THE GENERAL CONTRACTOR AND ALL CHANGES AS NOTED ON THE RECORD SET OF PRINTS SHALL BE INCORPORATED THEREON WITH RED INK IN A NEAT, LEGIBLE, UNDERSTANDABLE AND PROFESSIONAL MANNER.

C. ALL EQUIPMENT AND MATERIALS CONNECTED WITH THIS PROJECT SHALL BE INSTALLED COMPLETE, THOROUGHLY CLEANED, AND ALL RESIDUE REMOVED FROM INSIDE SUPPORTING EXTERIOR SURFACES OF ALL MATERIAL AND EQUIPMENT SHALL BE CLEANED AND DELIVERED IN A PERFECT, UNBLEMISHED CONDITION.

D. UPON COMPLETION OF THE INSTALLATION AND AS A CONDITION OF ITS ACCEPTANCE FURNISH ONE COPY OF THE FINAL INSPECTION CERTIFICATE TO THE OWNER.

3.02 PREPARATION COORDINATION.

A. THE CONTRACTOR SHALL COORDINATE THIS WORK WITH ALL OTHER CONTRACTORS FURNISHING LABOR, MATERIALS AND WORK, SO THAT THE WORK AS WHOLE SHALL BE EXECUTED AND COMPLETED WITHOUT CONFLICT OR DELAY.

B. EXAMINE THE DRAWINGS AND SPECIFICATIONS AND DETERMINE THE WORK TO BE PERFORMED BY THE ELECTRICAL, MECHANICAL AND OTHER TRADES. PROVIDE THE TYPE AND AMOUNT OF ELECTRICAL MATERIALS AND EQUIPMENT NECESSARY TO PLACE THIS WORK IN PROPER OPERATION, COMPLETELY WIRED TESTED AND READY FOR USE. THIS SHALL INCLUDE ALL CONDUIT, WIRE, DISCONNECTS, RELAYS, AND OTHER DEVICES FOR THE REQUIRED OPERATION SEQUENCE OF ALL ELECTRICAL, MECHANICAL, AND OTHER SYSTEMS OR EQUIPMENT.

C. PERFORM ALL WORK IN A MANNER WHICH WILL NOT CAUSE UNNECESSARY INCONVENIENCE OR DANGER TO THE OCCUPANTS, NOR INTERFERE WITH THE ACTIVITIES [illegible]

DRAWING REMOVED FROM SCOPE

[illegible] EDULE EACH POWER INTERRUPTION WITH OWNER, AND SHALL PROVIDE AT LEAST TWO WEEKS NOTICE OF [illegible] COMPLISHED.

[illegible] NG IN ACCORDANCE WITH DRAWING DETAILS.

3.04 CORE CUTTING, DRILLING, AND PATCHING

A. NO HOLES WILL BE ALLOWED IN ANY STRUCTURAL MEMBERS WITHOUT THE WRITTEN APPROVAL OF THE ARCHITECT, STRUCTURAL ENGINEER AND GENERAL CONTRACTOR.

3.05 INSTALLATION

A. WORKMANSHIP IS TO BE NEAT, BY EXPERIENCED WORKMEN WITH ADEQUATE SUPERVISION, AND IN LINE WITH NORMAL INDUSTRY WORKMANSHIP PRACTICES.

B. MAINTAIN WORKING CLEARANCE AROUND ELECTRICAL EQUIPMENT, IN ACCORDANCE WITH CODE REQUIREMENTS AS A MINIMUM.

C. WHERE LIGHTING FIXTURES AND OTHER ELECTRICAL ITEMS ARE SHOWN IN CONFLICT WITH LOCATIONS OF STRUCTURAL MEMBERS AND MECHANICAL OR OTHER EQUIPMENT, FURNISH AND INSTALL ALL REQUIRED SUPPORTS AND WIRING TO CLEAR THE ENCROACHMENT.

D. VERIFY LOCATION OF EACH OUTLET FOR POWER, SIGNAL, TELEPHONE/DATA, AND EACH LIGHTING FIXTURE WITH ARCHITECT PRIOR TO ROUGH-IN. INCLUDE IN BID COST OF RELOCATING EACH ITEM WITHIN TEN-FEET RADIUS OF ITS INDICATED LOCATION.

E. ALL CONDUIT TO BE RUN CONCEALED UNLESS OTHERWISE NOTED. ALL CONDUITS SHALL BE ROUTED OVERHEAD IN CEILING SPACES. NO CONDUITS SHALL BE PERMITTED IN CONCRETE SLAB, MASONRY WALLS UNLESS SPECIFICALLY SO INDICATED. CONDUIT SHALL BE RUN SO AS NOT TO INTERFERE WITH OTHER PIPING FIXTURES OR EQUIPMENT.

F. WHERE ALLOWED, EXPOSED CONDUIT RUNS SHALL BE INSTALLED PARALLEL OR PERPENDICULAR TO WALLS, STRUCTURAL MEMBERS, OR INTERSECTION OF VERTICAL PLANES AND CEILINGS.

G. ALL ELECTRICAL CONDUITS AND OTHER ELECTRICAL RACEWAYS PASSING THROUGH FIRE RATED CEILINGS, SLABS, CABLE TRAYS, WALLS AND PARTITIONS SHALL BE SEALED TO PREVENT THE SPREAD OF FIRE, SMOKE, AND GASSES. USE A UL LISTED AND APPROVED FIRE-STOP MATERIAL EQUAL TO RATING OF A WALL OR A FLOOR SLAB PENETRATED, INSTALLATION OF FIRE-STOP MATERIAL SHALL BE IN ACCORDANCE WITH MANUFACTURERS INSTRUCTIONS.

H. UNLESS WRITTEN PERMISSION IS GRANTED BY THE ARCHITECT, NO MATERIAL SHALL BE MOUNTED ON THE EXTERIOR WALLS OR PARAPET TOP OF THE BUILDING.

I. ALL ROTATING ELECTRICAL EQUIPMENT SHALL BE SUPPLIED WITH A FLEXIBLE, LIQUID-TIGHT CONDUIT WITH APPROPRIATE SLACK AND SHALL NOT EXCEED THIRTY-SIX (36) INCHES.

J. ALL POWER WIRING SHALL BE INSTALLED IN CONDUIT.

K. TELEPHONE WIRES SHALL BE PLENUM RATED CABLE FOR MOUNTING IN CEILING SPACES WITHOUT CONDUIT UNLESS OTHERWISE NOTED.

L. ALL WIRES FOR ALL SYSTEMS SHALL BE CONTINUOUS FROM SWITCH TO TERMINAL OR FURTHEST OUTLET. NO JOINTS SHALL BE MADE EXCEPT IN PULL, JUNCTION OR OUTLET BOXES, OR IN PANEL OR SWITCHBOARD GUTTERS.

M. ALL RECEPTACLE, CONTROL DEVICE, AND SWITCH MOUNTING HEIGHTS SHALL BE COORDINATED WITH ARCHITECTURAL ELEVATIONS PRIOR TO ROUGH-IN.

3.06 GROUNDING

A. ALL EQUIPMENT SHALL BE PROPERLY GROUNDED AS INDICATED ON DRAWINGS AND AS REQUIRED BY THE LATEST EDITION OF APPLICABLE CODES.

B. FURNISH AND INSTALL ALL GROUNDING CONDUCTORS, CONDUIT AND CLAMPS. THE SIZE OF THE GROUNDING CONDUCTORS SHALL BE NOT LESS THAN THAT SPECIFIED IN THE NEC.

C. BUILDING GROUNDING SYSTEM RESISTANCE TO GROUND SHALL NOT EXCEED 25 OHMS.

D. EACH BRANCH CIRCUIT SHALL BE EQUIPPED WITH CODE SIZE GREEN GROUND, EQUIPMENT WIRE (PER NEC 250-95) (NOT INDICATED ON DRAWINGS) WITHIN THE SAME CONDUIT FOR ALL CIRCUITS OF PANELBOARDS.

3.07 BRANCH CIRCUITS

A. NO MORE THAN THREE BRANCH CIRCUITS PERMITTED IN ONE CONDUIT UNLESS INDICATED OTHERWISE

3.08 IDENTIFICATION

A. THE FOLLOWING ITEMS SHALL BE EQUIPPED WITH NAMEPLATES:

1. ALL MOTORS, MOTOR STARTERS, CONTROL PANELS, MOTORS CONTROL REMOTE STATIONS.

2. ALL DISCONNECT AND SAFETY SWITCHES, MAIN DISTRIBUTION PANEL FEEDER OVERCURRENT DEVICES AND SPARES, CIRCUIT EQUIPMENT IN SEPARATE ENCLOSURES.

3. SPECIAL ELECTRICAL SYSTEMS SHALL BE PROPERLY IDENTIFIED AT JUNCTION AND PULL BOXES

4. ALL BRANCH CIRCUIT PANEL BOARDS SHALL HAVE IDENTIFYING ENGRAVED PLASTIC NAMEPLATES. ALSO, PROVIDE A TYPED DIRECTORY CARD FOR EACH BRANCH CIRCUIT PANELBOARD. THE CARD IS TO BE PLACED ON THE INTERIOR SIDE OF THE PANELBOARD DOOR BEHIND A CLEAR PLASTIC SHIELD. THE CARD SHALL IDENTIFY EACH CIRCUIT BY NUMBER, LOAD, AND LOCATION.

5. IN GENERAL, EQUIPMENT SHALL BE IDENTIFIED AS DESIGNATED ON THE ELECTRICAL DRAWINGS. NAMEPLATES FOR PANELBOARDS AND SWITCHBOARDS SHALL INCLUDE THE PANEL DESIGNATION, VOLTAGE AND PHASE OF THE SUPPLY AND THE SOURCE PANEL NAME AND CIRCUIT NUMBER (INCLUDE LOCATION IF SOURCE IS NOT WITHIN SIGHT). THE NAME OF THE MACHINE SHALL BE THE SAME AS THE NAME USED ON ALL MOTOR STARTERS, DISCONNECTS, AND P.B STATION NAMEPLATES FOR THAT MACHINE.

B. NAMEPLATES SHALL BE FABRICATED AS FOLLOWS:

1. NAMEPLATE MATERIALS SHALL CONSIST OF 3-PLY, 1/16" LAMINATED PLASTIC WITH WHITE CORE FOR LETTERING AND BLACK BACKGROUND.

2. CAPITAL LETTERS SHALL BE USED.

3. NAMEPLATES SHALL BE FASTENED WITH CADMIUM-PLATED SELF-TAPPING NO. 6 SCREWS 1/4" LONG

4. THE MINIMUM SIZE OF ALL NAME PLATES AND LETTERING SHALL BE 3/4" HIGH BY 2" LONG WITH 1/4" LETTERS.

3.09 PROTECTION

A. USE ALL MEANS NECESSARY TO PROTECT THE WORK AND MATERIALS FROM LOSS DURING AND AFTER INSTALLATION, AND PROVIDE ADEQUATE AND PROPER STORAGE FACILITIES DURING THE PROGRESS OF THE WORK. PROVIDE FOR THE SAFETY AND GOOD CONDITION OF ALL WORK UNTIL FINAL ACCEPTANCE OF THE WORK BY THE OWNER. REPLACE ALL DAMAGE OR DEFECTIVE WORK, MATERIAL, AND EQUIPMENT AT NO EXPENSE TO THE OWNER BEFORE REQUESTING FINAL ACCEPTANCE.

3.10 CLEANING OF EQUIPMENT, MATERIAL, AND PREMISES

A. SITE SHALL BE LEFT BROOM CLEAN AFTER COMPLETION OF WORK EACH DAY. UPON COMPLETION OF THE WORK, LEAVE THE PREMISES CLEAN OF ALL DIRT AND DEBRIS.

B. ALL EQUIPMENT AND MATERIAL CONNECTED WITH THIS PROJECT SHALL BE INSTALLED COMPLETE, THOROUGHLY CLEANED, AND ALL RESIDUE REMOVED FROM INSIDE SURFACES. EXTERIOR SURFACES OF ALL MATERIAL AND EQUIPMENT SHALL BE CLEANED AND DELIVERED IN A PERFECT, UNBLEMISHED CONDITION.

3.11 HANDLING OF WIRE AND CABLE

A. HANDLE WIRE AND CABLE SO AS TO AVOID DAMAGE TO CONDUCTORS AND TAKE EXTRA PRECAUTION TO AVOID SHARP BENDING OR SCORING OF THE CABLE. CABLE SHALL NOT BE LAID NOR DRAGGED UPON THE GROUND.

B. THE CONTRACTOR SHALL BE REQUIRED TO REMOVE AND REPLACE AT HIS OWN EXPENSE ALL WIRE AND CABLE DAMAGED DUE TO IMPROPER HANDLING, A